Integrating the Healthcare Enterprise

IHE Patient Care Devices (PCD)

Compendium of Medical Device Oriented Use Cases

Companion to the "Service-oriented Device Point-of-Care Interoperability (SDPi)" White Paper

Device-to-Device Connectivity in High-Acuity Healthcare Environments using Web Services Technology

Revision 1.0

Date: August 1, 2019
Author: IHE PCD Technical Committee
Email: pcd@ihe.net

Please verify you have the most recent version of this document. See here for Published Versions and here for Public Comment versions.

Copyright © 2019: IHE International, Inc.

Foreword

This is a companion document for the SDPi white paper of the IHE Patient Care Devices domain.

<For Public Comment Versions:> This white paper is published on <Month XX, 201x> for Public Comment. Comments are invited and can be submitted at http://www.ihe.net/Public_Comment/#domainname. In order to be considered in development of the subsequent version of the white paper, comments must be received by <Month XX, 201X>.

<For Published Versions:> This white paper is published on <Month XX, 201X>. Comments are invited and can be submitted at http://www.ihe.net/Public_Comment/#domainname.

General information about IHE can be found at: www.ihe.net.

Information about the IHE Patient Care Devices domain can be found at: ihe.net/IHE_Domains.

Information about the organization of IHE Technical Frameworks and Supplements and the process used to create them can be found at: http://ihe.net/IHE_Process and http://ihe.net/Profiles.

The current version of the IHE Patient Care Devices Technical Framework can be found at: http://ihe.net/Technical_Frameworks.

<Comments may be submitted on IHE Technical Framework templates any time at http://ihe.net/Templates_Public_Comments. Please enter comments/issues as soon as they are found. Do not wait until a future review cycle is announced.>

Copyright © 2019: IHE International, Inc.

CONTENTS

A INTRODUCTION 10

B INTEGRATED CLINICAL ENVIRONMENT (ICE) CLINICAL SCENARIOS 11

UC.1 ICE.1 - SAFETY INTERLOCKS 11

UC.2 ICE.2 - SYNCHRONIZATION WITH SAFETY INTERLOCK 12

UC.3 ICE.3 - PROCESS CONTROL (WORKFLOW) 13

UC.4 ICE.4 - SMART ALARM SYSTEM 14

UC.5 ICE.5 - DECISION SUPPORT 15

UC.6 ICE.6 - PHYSIOLOGICAL CLOSED LOOP CONTROL (PCLC) 16

UC.7 ICE.7 - MEDICAL DEVICE PLUG-AND-PLAY INTEROPERABILITY (MD PNP) 17

C SDC/QH – QUIET HOSPITAL (QH) SCENARIO AND USE CASES 19

UC.8 SDC/QH.1 – DEVICE ALERT SIGNAL DELEGATION TO SINGLE-PT. ALERT AGGREGATOR 19

UC.9 SDC/QH.2 – SINGLE PT. ALERT AGGREGATOR ALERT SIGNAL DELEGATION TO MULTI-PT. AGGREGATOR 19

UC.10 SDC/QH.3 – DEVICE ALERT SIGNAL DELEGATION TO ALERT COMMUNICATION MANAGER 20

UC.11 SDC/QH.4 – MULTI-PT. AGGREGATOR TO ALERT COMMUNICATION MANAGER 20

UC.12 SDC/QH.5 – SDC TO FHIR GATEWAY. 20

UC.13 SDC/QH.6 – ALERT COMMUNICATIONS MANAGER TO CARE-GIVER ALERT COMMUNICATOR 20

UC.14 SDC/QH.7 – ALERT COMMUNICATOR (ACM AC) FAILURE 20

UC.15 SDC/QH.8 – ALERT COMMUNICATIONS MANAGER (ACM AM) FAILURE 20

UC.16 SDC/QH.9 – MULTI-PT. AGGREGATOR FAILURE 20

UC.17 SDC/QH.10 – SINGLE PT. AGGREGATOR FAILURE 20

D SDC/PDP - PREECLAMPSIA (PDP) SCENARIO AND USE CASES 22

UC.18 SDC/PDP.1 - IN-HOSPITAL, AT HOME AND MOBILE / CLINIC CARE CONTEXTS 22

UC.19 SDC/PDP.2 - ACUTE POINT-OF-CARE MEDICAL AND PERSONAL HEALTH DEVICES 22

UC.20 SDC/PDP.3 - LAB RESULTS INCLUDING POINT OF CARE DEVICES AND TRANSACTIONS 22

UC.21 SDC/PDP.4 - LOCATION TRACKING AND DEVICE IDENTIFICATION / ASSOCIATION MANAGEMENT 22

UC.22 SDC/PDP.5 - A CLOUD-BASED CDS SYSTEM AND "LOCALLY" NETWORKED SYSTEMS & APPLICATIONS 22

E SDC/FESS – ENDOSCOPIC SURGERY SCENARIO AND USE CASES 23

UC.23 SDC/FESS.1 – SURGEON VIEW OF PATIENT VITALS 23

UC.24 SDC/FESS.2– SURGEON CONTROL OF OR TABLE AND LIGHTS 23

UC.25 SDC/FESS.3– SURGEON CONTROL OF SURGICAL TOOLS 23

UC.26 SDC/FESS.4 – DEVICE REPORTS TECHNICAL ISSUE TO RESPONSIBLE BMET 24

UC.27 SDC/FESS.5 – SEAMLESS EXCHANGE OF MEDICAL DEVICES 24

F NITRD – MEDICAL DEVICE SCENARIO AND USE CASES 25

UC.28 NITRD.1 – SEAMLESS CHANGES OF MEDICAL DEVICES 25

UC.29 NITRD.2 – CAPTURE OF DATA AND SETTINGS 26

UC.30 NITRD.3 – SUPERVISORY CONTROL ESTABLISHED 26

Copyright © 2019: IHE International, Inc.

UC.31 NITRD.4 – AUTONOMOUS PATIENT THERAPY 26
UC.32 NITRD.5 – DATA FLOWS THROUGH THE CONTINUUM OF CARE 26
UC.33 NITRD.6 – CAPTURE OF EQUIPMENT CONFIGURATIONS 26
UC.34 NITRD.7 – BLACK BOX RECORDER 26
G OR.NET USE CASES 27
UC.35 ORNET.001 - INTEGRATION OF ANESTHESIA VIDEO DATA INTO (ANESTHESIOLOGIC) PATIENT MONITORING VIA RADIO TRANSMISSION 27
UC.36 ORNET.004 - INDICATES A WARNING FROM ONE OSCB-COMPLIANT DEVICE TO ANOTHER 27
UC.37 ORNET.005 - TRANSFER OF THE CONTROL OF DEVICE A BY A DEVICE B, WHICH IS ACTUALLY PROHIBITED 27
UC.38 ORNET.006 - USER-SPECIFIC WORKFLOW-DEPENDENT ADJUSTMENT OF THE HEIGHT OF THE OPERATING TABLE / FOOT STEP 27
UC.39 ORNET.009 - DISPLAY OF ELECTROPHYSIOLOGICAL SIGNALS ON A MONITOR BY A SURGEON 27
UC.40 ORNET.010 - USE OF A FOOT SWITCH AS AN INPUT DEVICE 27
UC.41 ORNET.012 - DISPLAY OF FORCE AND MOMENT SENSOR (KMS) FOR KNEE AXIS DETERMINATION ON CENTRAL MONITOR 27
UC.42 ORNET.016 - COLLISION AVOIDANCE OF DEVICES 27
UC.43 ORNET.017 - CONTROL OF A DESIRED MANIPULATOR BY A COMMON CONTROL CONSOLE 27
UC.44 ORNET.018 - POWER CONTROL OF THE MILLING MACHINE AT THE MIDDLE 27
UC.45 ORNET.019 - LINKING THE SURGICAL LIGHT TO THE ENDOSCOPE 27
UC.46 ORNET.024 - STORAGE OF INTRAOPERATIVE IMAGE DATA IN THE EHR 27
UC.47 ORNET.029 - INTRAOPERATIVE INPUT OF MONITORING DATA TO EHR 27
UC.48 ORNET.030 - DISPLAY OF MONITORING DATA IN MICROSCOPE IMAGE 27
UC.49 ORNET.032 - INSERTION OF RELEVANT INFORMATION INTO THE SURGICAL MICROSCOPE ACCORDING TO THE CLINICAL SITUATION 27
UC.50 ORNET.035 - CENTRAL PRESENTATION OF RELEVANT DEVICE DATA / DOCUMENTS / PATIENT DATA CLOSE TO THE SITE 27
UC.51 ORNET.040 - SINGLE CHECK-DESK 27
UC.52 ORNET.042 - PREVENTION OF EXPLOSIONS 27
UC.53 ORNET.043 - CONTROLLING THE US DISSECTOR WITH THE HUMAN MACHINE INTERFACE (MMI) OF THE MICROSCOPE 28
UC.54 ORNET.050 - SERVICE TOTAL LOG 28
UC.55 ORNET.051 - VISUALIZATION OF INSTRUMENT POSITION 28
UC.56 ORNET.051 - VISUALIZATION OF INSTRUMENT POSITION 28
UC.57 ORNET.067 - FUSION IMAGING INTRAOPERATIVELY US - CT / MRT 28
UC.58 ORNET.068 - IMAGE-BASED COMMUNICATION. 28
UC.59 ORNET.069 - MONITORING OF PATIENT AND DEVICE PARAMETERS, ESPECIALLY ALARMS 28
UC.60 ORNET.070 - CONTROL OF THE ANESTHESIOLOGICALLY RELEVANT DEVICE PARAMETERS. 28
UC.61 ORNET.072 - IMPORT OF CLINICAL DATA FROM THE EHR 28
UC.62 ORNET.073 - STORAGE OF DIGITAL PATIENT RECORDS IN THE EHR. 28
UC.63 ORNET.078 - OPERATING ROOM PREPARATION 28

 Copyright © 2019: IHE International, Inc.

UC.64 ORNET.079 - REMOTE DIAGNOSTICS REMOTE MAINTENANCE FIRMWARE UPDATE 28
UC.65 ORNET.082 - VIDEO DISPLAY OF SELECTED PARAMETERS FROM EXTERNAL OSCB-COMPLIANT DEVICES 28
UC.66 ORNET.084 - TRANSFER OF A 3D VOLUME IMAGE TO A NAVIGATION SYSTEM 28
UC.67 ORNET.086 - STORING AN ENDOSCOPE VIDEO 28
UC.68 ORNET.090 - POSITION ADJUSTMENT C-ARM AND OPERATING TABLE 28
UC.69 ORNET.091 - INSERTION OF TUMOR BORDERS INTO THE MICROSCOPE. 28
UC.70 ORNET.095 - CONTROL OF THE ENDOSCOPE LIGHT SOURCE VIA THE NAVIGATION MMI 28
UC.71 ORNET.096 - INTEGRATION OF B-MODE ULTRASOUND INTO NAVIGATION 28
UC.72 ORNET.097 - INTEGRATION OF 3D ULTRASOUND INTO NAVIGATION. 28
UC.73 ORNET.100 - UPLOADING PATIENT STRAIN DATA TO THE MEDICAL IT SUBNET 28
UC.74 ORNET.101 - COUPLING OF THE FOOTING HEIGHT TO THE SEAT HEIGHT 28
UC.75 ORNET.102 - DETECTION OF OSCB COMPLIANT DEVICES 28
UC.76 ORNET.103 - FAILURE OF OSCB COMPLIANT DEVICES 29
UC.77 ORNET.104 - LOGOUT OF OSCB-COMPLIANT DEVICES 29
UC.78 ORNET.105 - AUTOMATIC FEEDING OF PATIENT STRAIN DATA TO OSCB COMPLIANT DEVICE 29
UC.79 ORNET.106 - ENTER THE OPERATOR ID IN THE IT SUBNET 29
UC.80 ORNET.107 - AUTOMATIC INPUT OF OPERATOR CODE IN OSCB-COMPLIANT DEVICE. 29
UC.81 ORNET.108 - TRANSFER OF IMAGE DATA FROM THE PACS TO A MONITOR 29
UC.82 ORNET.109 - CREATE INTRAOPERATIVE SCREENSHOTS. 29
UC.83 ORNET.110 - TRANSFER REGISTRATION INFORMATION FROM THE NAVIGATION DEVICE TO THE ROBOTIC SYSTEM 29
UC.84 ORNET.111 - DISPLAY ADDITIONAL INFORMATION ON THE MONITOR OF THE NAVIGATION DEVICE 29
UC.85 ORNET.112 - LOAD PLANNING IMAGE DATA FROM THE PACS INTO THE ROBOTIC SYSTEM 29
UC.86 ORNET.114 - RECORDING AND ARCHIVING OF VIDEO DATA FOR DOCUMENTATION VIA A FRAME GRABBER APPLICATION 29
UC.87 ORNET.115 - RECORDING AND ARCHIVING OF VIDEO DATA FOR DOCUMENTATION VIA AN IP DATA STREAM 29
UC.88 ORNET.116 - VIEW OF DICOM OBJECTS ON ANY TERMINAL WITH DISPLAY FUNCTION 29
UC.89 ORNET.117 - PATIENT AND SURGICAL CENTERED DICOM OBJECT DISPLAY 29
UC.90 ORNET.118 - STORAGE OF DICOM OBJECTS IN DICOM OBJECT-RECORDING SYSTEMS 29
UC.91 ORNET.119 - CONTROL FROM A DICOM OBJECT VIEWER TO CHANGE THE LAYOUT OF A DISPLAY SCREEN 29
UC.92 ORNET.120 - LINKING THE OP LIGHT TO THE C-ARM 29
UC.93 ORNET.121 - RECONSTRUCTION OF THE OP SITUS BY LASER MEASURING POINT. 29
UC.94 ORNET.122 - POWER CONTROL OF THE VACUUM CLEANER ON THE CENTRAL PIPE. 29
UC.95 ORNET.123 - DERIVATION OF THE ALARMS OF THE SURGICAL ALARM SYSTEM TO THE OPERATING THEATER 29
UC.96 ORNET.124 - ALARM-TRIGGERED MANIPULATION OF THE RGB ROOM LIGHT 29
UC.97 ORNET.125 - SHOW WARNING SIGNALS IN VIDEOS OF MINIMALLY / NON-INVASIVE IMAGING PROCEDURES 30

 Copyright © 2019: IHE International, Inc.

UC.98 ORNET.126 - RE-ADJUSTMENT OF PREOPERATIVE CT DATA USING INTRAOPERATIVE DVT 30
UC.99 ORNET.127 - AUTOMATIC ORIENTATION OF THE STEREO CAMERA 30
UC.100 ORNET.128 - LOGGING THE INSTRUMENT POSITION DURING OPTICAL NAVIGATION 30
UC.101 ORNET.129 - TRANSFER OF A LOG TO THE LOGISTICS SYSTEM 30
UC.102 ORNET.130 - INTEGRATION OF NEUROMONITORING OF THE ENT AREA INTO THE OPTICAL NAVIGATION 30
UC.103 ORNET.131 - ADJUST THE POSITION OF THE OPERATING TABLE USING A NAVIGATED POINTER 30
UC.104 ORNET.132 - COMMON CONTROL INTERFACE FOR ALL DEVICES. 30
UC.105 ORNET.133 - AUTOMATIC DOCUMENTATION OF DEVICE PARAMETERS: BLOOD VOLUME 30
UC.106 ORNET.134 - AUTOMATIC DOCUMENTATION OF DEVICE PARAMETERS: SURFACE DOSE. 30
UC.107 ORNET.135 - COMBINATION OF ROTATIONAL ANGIOGRAPHY WITH ELECTROPHYSIOLOGICAL MEASURING SITE 30
UC.108 ORNET.136 - CT / MRI LINKAGE WITH TEE ULTRASOUND IN ENDOSCOPIC MITRAL VALVE SURGERY 30
UC.109 ORNET.137 - COMMON OPERATION OF ALL ROOM AIR-CONDITIONING UNITS FROM STERILE WORKPLACES 30
UC.110 ORNET.138 - AVAILABILITY OF ALL PATIENTS INFORMATION FROM STERILE WORKPLACE 30
UC.111 ORNET.139 - POWER CONTROL OF AN ULTRASONIC BREAKER 30
UC.112 ORNET.140 - INTEGRATION OF NEUROMONITORING OF THE BRAIN INTO THE RISK AREAS OF OPTICAL NAVIGATION 30
UC.113 ORNET.141 - INTEGRATION OF INTRAOPERATIVE ULTRASOUND DATA OF NEUROSURGERY INTO THE RISK AREAS OF OPTICAL NAVIGATION 30
UC.114 ORNET.142 - ADAPTATION OF DEVICE PARAMETERS TO VITAL PARAMETERS OF PATIENT 30
UC.115 ORNET.143 - ADAPTATION OF DEVICE PARAMETERS TO PATIENT 'S VITAL PARAMETERS 30
UC.116 ORNET.144 - INTEGRATION OF THE LAPAROSCOPY AND ENDOSCOPY TOWER 30
UC.117 ORNET.145 - LINKING THE SURGICAL COLUMN AND THE OPERATING TABLE 30
UC.118 ORNET.146 - WARNING IF PRESSURE IS TOO STRONG ON THE ULTRASOUND DEVICE 30
UC.119 ORNET.147 - CHANGE THE US DISSECTOR PARAMETERS 31
UC.120 ORNET.148 - REMOTE TRIGGERING OF US DISSECTOR DEVICE FUNCTIONALITIES 31
UC.121 ORNET.149 - US DISSECTOR INFORMS THE MICROSCOPE OF ITS CURRENT TRIGGER STATE 31
UC.122 ORNET.150 - REMOTE TRIPPING OF US DISSECTOR DEVICE FUNCTIONALITIES 31
UC.123 ORNET.151 - ACOUSTIC AND VISUAL FEEDBACK OF INTRAOPERATIVE NEUROMONITORING DURING SURGICAL PROCEDURES 31
UC.124 ORNET.152 - TRANSFER OF VIDEO AND IMAGE DATA 31
UC.125 ORNET.153 - READ IMAGE DATA FROM THE PACS 31
UC.126 ORNET.154 - UPLOADING IMAGE DATA TO THE PACS 31
UC.127 ORNET.155 - FILE IMPORT FROM THE EHR 31
UC.128 ORNET.156 - FILE EXPORT TO THE EHR 31
H IHE PCD - DEVICE TO ENTERPRISE COMMUNICATION (DEC) USE CASES 32

 Copyright © 2019: IHE International, Inc.

UC.129 DEC.1 - COMMUNICATE PATIENT IDENTIFIED DEC DATA TO EMR/EHR 32
UC.130 DEC.2 - COMMUNICATE VALIDATED PERIODIC DEC DATA TO EMR/EHR 32
UC.131 DEC.3 - USE CASES FOR AUTOMATIC PATIENT DEMOGRAPHICS ACQUISITION 33
UC.132 DEC.3.1 - PATIENT ID KNOWN IN ADT, LOCALLY AVAILABLE 33
UC.133 DEC.3.2 - PATIENT ID KNOWN IN ADT, NOT LOCALLY AVAILABLE 33
UC.134 DEC.3.3 - PATIENT ID NOT KNOWN IN ADT, LOCALLY AVAILABLE 34
UC.135 DEC.3.4 - PATIENT ID NOT KNOWN IN ADT, NOT LOCALLY AVAILABLE. 34
UC.136 DEC.3.5 OTHER CLINICAL EXAMPLES 34
UC.137 DEC.3.5A – ASSOCIATION OF PATIENT ID AND MEDICAL DEVICE – VIA ID LIST 34
UC.138 DEC.3.5B - ASSOCIATION OF PATIENT ID AND MEDICAL DEVICE – VIA PATIENT WRISTBAND 34
UC.139 DEC.3.5C - ASSOCIATION OF PATIENT ID AND MEDICAL DEVICE – VIA RFID TAGS 34

I IHE PCD - DEC SUBSCRIBE TO PATIENT DATA (SPD) USE CASES 35

UC.140 SPD.1: COMMUNICATE PATIENT IDENTIFIED DATA TO EMR/EHR 35
UC.141 SPD.2 - COMMUNICATE VALIDATED PERIODIC DATA TO EMR/EHR 35
UC.142 SPD.3 - SUBSCRIBE TO PATIENT DATA AT SPECIFIC PERIODIC INTERVAL. 35
UC.143 SPD.4 - SUBSCRIBE TO PATIENT DATA FOR SPECIFIC PATIENTS. 35
UC.144 SPD.5 - SUBSCRIBE TO PATIENT DATA FOR PATIENTS FROM A SPECIFIC LOCATION. 35
UC.145 SPD.6 - SUBSCRIBE TO PATIENT DATA FOR A SPECIFIC DEVICE OR CLASS OF DEVICES 35
UC.146 SPD.7 - SUBSCRIBE TO PATIENT DATA FOR SPECIFIC PARAMETERS OR CLASS OF PARAMETERS. 35
UC.147 SPD.8 - REQUEST A SNAPSHOT OF CURRENT OR MOST RECENT PATIENT DATA. 36

J IHE PCD - ALERT COMMUNICATION MANAGEMENT (ACM) USE CASES 37

UC.148 ACM.1 - LOCATION SOURCED 37
UC.149 ACM.2 - IDENTIFIED PATIENT SOURCE 38
UC.150 ACM.3 - SAME AS ACM.1/ACM.2 WITH ESCALATION WITH CANCEL AT ALERT SOURCE 39
UC.151 ACM.4 - SAME AS ACM.1/ACM.2 WITH ESCALATION WITH CANCEL AT COMMUNICATION ENDPOINT 39
UC.152 ACM.5 - SAME AS ACM.1/ACM.2 WITH ESCALATION WITH CANCEL AT AM 39
UC.153 ACM.6 - INFORMATION WITH NO DESTINATION OTHER THAN LOGGING BY THE AM 39
UC.154 ACM.7 - EQUIPMENT SOURCED ALERT 39

K IHE PCD - MEDICAL EQUIPMENT MANAGEMENT DEVICE MANAGEMENT (MEMDMC) USE CASES 40

UC.155 MEMDMC.1 - EQUIPMENT OBSERVATIONS TO CMMS 40
UC.156 MEMDMC.2 - EQUIPMENT OBSERVATIONS TO CMMS 40

L IHE PCD - MEDICAL EQUIPMENT MANAGEMENT LOCATION SERVICES (MEMLS) USE CASES 41

UC.157 MEMLS.1 - COMMUNICATION OF LOCATION OBSERVATIONS IN CONJUNCTION WITH OTHER NON-LOCATION RELATED TRANSACTIONS 41
UC.158 MEMLS.2 - COMMUNICATION OF LOCATION OBSERVATIONS IN CONJUNCTION WITH LS SPECIFIC EVENTS 42

 Copyright © 2019: IHE International, Inc.

M IHE PCD - WAVEFORM CONTENT MODULE (WCM) USE CASES 43
UC.159 WCM.1 - ALARM WAVEFORM SNAPSHOT 43
UC.160 WCM.2 - REAL-TIME WAVEFORM VIEWING 43
UC.161 WCM.3 - ARCHIVED WAVEFORM VIEWING 43
UC.162 WCM.4 - MIXED SNAPSHOT AND CONTINUOUS WAVEFORM VIEWING 43
UC.163 WCM.5 - WAVEFORM SNAPSHOT TO EHR 43
UC.164 WCM.6 12 - LEAD ECG 43
N IHE PCD - RETROSPECTIVE DATA QUERY (RDQ) USE CASES 44
UC.165 RDQ.1 - QUERY FOR ALL RETROSPECTIVE DATA ON A SINGLE PATIENT. 44
UC.166 RDQ.2 - QUERY FOR ALL RETROSPECTIVE DATA ON MULTIPLE PATIENTS. 44
UC.167 RDQ.3 - QUERY FOR RETROSPECTIVE DATA ON A SINGLE PATIENT WITHIN A SPECIFIED TIME INTERVAL. 45
UC.168 RDQ.4 - QUERY FOR RETROSPECTIVE DATA ON MULTIPLE PATIENTS WITHIN A SPECIFIED TIME INTERVAL. 46
UC.169 RDQ.5 - QUERY FOR RETROSPECTIVE DATA ON 1 OR MORE PARAMETER ELEMENTS ON A SINGLE PATIENT. 47
UC.170 RDQ.6 - QUERY FOR RETROSPECTIVE DATA ON 1 OR MORE PARAMETER ELEMENTS ON MULTIPLE PATIENTS. 48
UC.171 RDQ.7 - QUERY FOR RETROSPECTIVE DATA ON 1 OR MORE PARAMETER ELEMENTS ON A SINGLE PATIENT WITHIN A SPECIFIED TIME INTERVAL. 49
UC.172 RDQ.8 - QUERY FOR RETROSPECTIVE DATA ON 1 OR MORE PARAMETER ELEMENTS ON MULTIPLE PATIENTS WITHIN A SPECIFIED TIME INTERVAL. 50
O IHE PCD - IMPLANTABLE DEVICE CARDIAC OBSERVATION (IDCO) USE CASES 52
UC.173 IDCO.1 - IMPLANTABLE CARDIAC DEVICE IN-CLINIC FOLLOW-UP 52
UC.174 IDCO.2 - IMPLANTABLE CARDIAC DEVICE IN-CLINIC FOLLOW-UP WITH NETWORKED PROGRAMMER THAT TRANSLATES INFORMATION 52
UC.175 IDCO.3 - IMPLANTABLE CARDIAC DEVICE REMOTE FOLLOWUP 53
UC.176 IDCO.4 - REMOTE MONITORING OF IMPLANTED CARDIAC DEVICES 53
P IHE PCD - POINT-OF-CARE INFUSION VERIFICATION (PIV) USE CASES 56
UC.177 PIV.1 – TRANSFER OF INFUSION PARAMETERS FROM BPOC TO INFUSION DEVICE 56
Q IHE PCD - INFUSION PUMP EVENT COMMUNICATION (IPEC) 58
UC.178 IPEC.1: COMMUNICATE EVENT DATA TO EMR/EHR 58
R IHE PCD - POINT-OF-CARE IDENTITY MANAGEMENT (PCIM) USE CASES 59
UC.179 PCIM.1 - ASSOCIATING DEVICE WITH PATIENT 59
UC.180 PCIM.2 - DISASSOCIATING DEVICE FROM PATIENT 60
UC.181 PCIM.3 - QUERY FOR THE DEVICES FOR A PATIENT 60
UC.182 PCIM.4 - QUERY THE ASSOCIATED PATIENT FOR A DEVICE 61
UC.183 PCIM.5 - DEVICE REGISTRANT REGISTERS A DEVICE 61
UC.184 PCIM.6 - QUERY THE DEVICE REGISTRANT FOR A LIST OF CANDIDATE DEVICES FOR AN ASSOCIATION 61
S CEN/TC 251/PT5-021 (VITAL) USE CASES 62

 Copyright © 2019: IHE International, Inc.

UC.185 VITAL.1 - DATA LOGGER - SINGLE DEVICE 63
UC.186 VITAL.2 - DATA LOGGER - MULTIPLE DEVICES 66
UC.187 VITAL.3 - REAL-TIME DATA DISPLAY 69
UC.188 VITAL.4 - PATIENT ALARM MONITORING 70
UC.189 VITAL.5 - REMOTE CONTROL 71
UC.190 VITAL.6 - PATIENT VIEWING INTEROPERABILITY 73
UC.191 VITAL.7 - PATIENT MONITORING INTEROPERABILITY 75
UC.192 VITAL.8 - PATIENT DATA EXCHANGE (OFF-LINE) 76
UC.193 VITAL.9 - PATIENT DATA EXCHANGE (ON-LINE/INTERACTIVE) 78

T ONC/AHIC COMMON DEVICE CONNECTIVITY USE CASES 81

UC.194 AHIC.1 - CONFIGURE AND REGISTER A DEVICE TO COMMUNICATE WITH AN EHR. 82
UC.195 AHIC.2 - ASSOCIATE PATIENT ID AND DEVICE INFORMATION WITHIN AN EHR. 82
UC.196 AHIC.3 - COMMUNICATE MEASUREMENT INFORMATION TO THE EHR 82
UC.197 AHIC.4 - COMMUNICATE DEVICE META-DATA WITH EACH MEASUREMENT TO THE EHR. 82
UC.198 AHIC.5 - COMMUNICATE MEASUREMENT INTERVALS, ETC. WITHIN THE EHR. 83
UC.199 AHIC.6 - QUERY THE DEVICE OR DEVICE INTERMEDIARY FOR ADDITIONAL INFORMATION. 83
UC.200 AHIC.7 – GRACEFULLY RECOVER FROM A LAPSE IN EHR CONNECTIVITY. 83
UC.201 AHIC.8 - COMMUNICATE STANDARDIZED ALARM TYPES TO THE EHR. 84
UC.202 AHIC.9 - SET LIMITS AND SAFEGUARDS FOR DEVICE SETTINGS FROM THE EHR TO A DEVICE. 84
UC.203 AHIC.10 - WIRELESSLY COMMUNICATE POC DEVICE INFORMATION FROM THE DEVICE TO A DEVICE INTERMEDIARY OR EHR. 84

U "SPECIAL" PATIENT MONITORING USE CASES 90

UC.204 PM.1 - SYNCHRONIZED CARDIOVERSION 90
UC.205 PM.2 - INTRA-AORTIC BALLOON PUMP SYNCHRONIZATION 90
UC.206 PM.3 - CATHETER INSERTION PROCEDURE 91
UC.207 PM.4 - THE USER "COCKPIT" 91

 Copyright © 2019: IHE International, Inc.

A Introduction

Overview

This document is a collection of use cases gleaned from a number of sources including:

- AAMI 2700-1:2019
  - Medical Devices and Medical Systems – Essential safety requirements for equipment comprising the patient-centric integrated clinical environment (ICE) – Part 1: General requirements and conceptual model
  - Previously ASTM F2761-09(2013)
- IHE PCD Profiles
- NITRD
- ONC/AHIC
- OR.NET
- IHE PCD SDPi White Paper
- CEN TC251 VITAL

It was developed in conjunction with the IHE PCD SDPi White Paper project, but others are welcome to use and adapt it for other purposes.

Copyright © 2019: IHE International, Inc.

B Integrated Clinical Environment (ICE) Clinical Scenarios

These scenarios are extracted from ASTM F2761-09(2013) / AAMI 2700-1:2019.

UC.1 ICE.1 - Safety Interlocks

Current State:

A woman underwent an uneventful total abdominal hysterectomy and bilateral salpingo-oophorectomy. Postoperatively, the patient complained of severe pain and received intravenous morphine sulfate in small increments. She began receiving a continuous infusion of morphine via a patient analgesia (PCA) pump. A few hours after leaving the PACU [post anesthesia care unit] and arriving on the floor [hospital ward], she was found pale with shallow breathing, a faint pulse, and pinpoint pupils. The nursing staff called a "code," and the patient was resuscitated and transferred to the intensive care unit on a respirator [ventilator]. Based on family wishes, life support was withdrawn and the patient died. Review of the case by providers implicated a PCA overdose." [Delayed detection of respiratory compromise in PATIENTS undergoing PCA therapy is not uncommon because monitoring of respiratory status has been confounded by excessive nuisance alarm conditions (poor alarm condition specificity).

Proposed State:

While on the PCA infusion pump, the PATIENT is monitored with a respiration rate monitor and a pulse oximeter. If physiological parameters move outside the pre-determined range, the infusion is stopped and clinical staff is notified to examine the PATIENT and restart the infusion if appropriate. The use of two independent physiological measurements of respiratory function (oxygen saturation and respiratory rate) enables a smart algorithm to optimize sensitivity, thereby enhancing the detection of respiratory compromise while reducing nuisance alarm conditions. [23]

CConOps:

The patient is connected to a PCA infusion pump containing morphine sulfate, a large volume infusion pump providing a carrier line of saline, a pulse oximeter, a non-invasive blood pressure device, a respiration rate monitor and a distributed alarm system. Clinicians involved are physician, nurse, and clinical assistant. Heart rate and blood pressure, respiration rate, pain score and sedation score are collected as directed by the clinical process (e.g. using an electronic context-specific smart checklist) for set-up of a PCA pump. An intravenous (IV) line assessment is also completed. The PCA infusion pump, large volume infusion pump, and pulse oximeter are attached to the integrated system. The system queries the hospital information system for the patient's age, and medication list (specifically, whether the patient is receiving sedatives or non-PCA opioids), and searches for a diagnosis of sleep apnea. The system then accesses the physician's orders from the computerized physician order entry system for dosage and rate for the PCA and large volume infusion pump, and verifies the values programmed into the infusion pump. The patient's SpO2 (arterial oxygen saturation measured by pulse oximetry) and respiration rate are monitored continuously.

The system uses an algorithm based on weight, age, medication list, diagnoses, SpO2 and respiration rate to determine the state of the patient. Sedation and pain scores also contribute to this algorithm. If the algorithm detects decreases in the patient's SpO2 and/or respiration rate below the calculated or pre-set threshold, a command is sent to stop the PCA pump to prevent further drug overdose, and the system generates a respiratory distress medium priority alarm

Copyright © 2019: IHE International, Inc.

condition sent via the distributed alarm system. Furthermore, if the algorithm detects that both the SpO2 and respiration rate indicate distress, the system generates a "severe respiratory distress" high priority alarm condition sent via the distributed alarm system.

Benefits of this new system:

a) Sensitive and specific detection of respiratory compromise prior to irreversible injury;
b) Discontinuation of medication infusion pump to slow or stop deterioration in respiratory status; and
c) Provision of early, informative, notification to the clinical staff to enable early intervention.
d) Risks of this new system:
e) inaccuracy of information in the physician's orders;
f) inaccuracy in the information systems;
g) inaccuracy in clinical data which contribute to the algorithm; and
h) unnecessarily stopping the infusion pump due to a false positive alarm condition for respiratory distress.

UC.2 ICE.2 - Synchronization with safety interlock

Current State:

"A 32-year-old woman had a laparoscopic cholecystectomy [gall bladder removal] performed under general anesthesia. At the surgeon's request, a plain film x-ray was shot during a cholangiogram [bile duct x-ray]. The anesthesiologist stopped the ventilator for the film. The x-ray technician was unable to remove the film because of its position beneath the table. The anesthesiologist attempted to help her, but found it difficult because the gears on the table had jammed. Finally, the x-ray was removed, and the surgical procedure recommenced. At some point, the anesthesiologist glanced at the EKG and noticed severe bradycardia. He realized he had never restarted the ventilator. (The ventilator is typically stopped for 20–60 seconds to prevent motion-induced blurring of the image.) This patient ultimately expired."

Proposed State:

The portable x-ray is connected to the anesthesia workstation ventilator as part of the set-up and positioning. The technician is prompted to expose the image at either inspiration or expiration per physician order. Once the technician is ready, the x-ray machine is activated, and the exposure is triggered at either inspiration or expiration. If the exposure time is calculated to be too long and the respiratory rate is too fast to permit effective synchronization, the ventilator is automatically paused (briefly) at either end-inspiration or end-expiration. The pause time is determined by the necessary exposure time, and then ventilation is automatically resumed at the pre-image respiration rate.

CConOps:

The patient is undergoing a surgical procedure under anesthesia and is connected to an anesthesia workstation, which is part of the integrated system. The radiology technician arrives in the operating room (OR) with a portable x-ray machine, which is connected to the integrated system and positioned to take an image. The phase of the breathing cycle in which the image is to be captured (inspiration or expiration) is entered into the system by the technician. The exposure time and x-ray activation latency of the portable x-ray equipment are communicated to the

Copyright © 2019: IHE International, Inc.

integrated system. The anesthesia provider, through the user interface of the anesthesia workstation, activates an x-ray synchronization mode. In this mode the anesthesia workstation accepts a maximum of one electronic "ventilator pause" command if received within the next five minutes. The OR team are then instructed to leave the room, and the x-ray technician activates the x-ray. The integrated system determines if there is sufficient time to obtain the x-ray during the desired phase of the respiratory cycle. If so, the x-ray exposure is automatically activated at the desired phase of respiration. If not, the anesthesia workstation ventilator is paused by the system at the appropriate phase of the breathing cycle, and resumes ventilation when the image has been captured or after a pre-set time period if the image is not taken. (The ventilator automatically restarts – a resume command is not needed. This follows the safety-critical system principles of the Software Engineering Institute's Simplex Architecture.) Then the OR team re-enters the OR, and the surgical procedure continues.

NOTE A similar process can be utilized in the intensive care environment with a critical care lung ventilator, or in interventional radiology for cerebrovascular imaging.

Benefits of this new system:

a) Add error resistance to the x-ray procedure by eliminating the dependence on the operator (e.g. anesthesia provider) to remember to turn the ventilator back on;
b) Shorten or eliminate the period of apnea, thereby reducing potentially adverse responses to apnea; and
c) Provide the ability to synchronize x-ray exposure with inspiratory hold, without requiring anyone to be present in the x-ray exposure area to manually generate sustained inspiration.

Risks of this new system: A synchronization error could lead to x-ray exposure at an incorrect phase of respiration.

UC.3 ICE.3 - Process control (workflow)

Current State:

An elderly female was started on an IV heparin infusion for acute myocardial infarction. Daily Partial Thromboplastin Time or PTT (a blood measurement of anticoagulation) results repeatedly exceeded the therapeutic range. The heparin dose was lowered but the PTT was not repeated until the next day, when it was still high. Patient developed a retroperitoneal hematoma (internal bleeding) and died.

Proposed State:

The infusion pump is connected to the integrated system. Therefore, the integrated system is aware that the infusion pump is administering heparin. The system prompts the clinical staff for the required physiological measurements, generates orders for the lab to complete the PTT test, and verifies the dosage and rate of infusion with existing orders. A manual override of the pump is required in order to start the pump without the appropriate physiological measurements and orders. An override would create an appropriate notification.

CConOps:

The patient is attached to a large volume infusion pump with heparin solution. During the setup of the large volume infusion pump, the dosage of the heparin IV bag is verified with the computerized provider order entry system. Heart rate, blood pressure, and respiration rate are

Copyright © 2019: IHE International, Inc.

measured. An IV line assessment is completed. When the integrated system recognizes that the medication being infused is heparin, it automatically places an order for serial PTT tests. Once the laboratory information system determines the PTT, the integrated system retrieves the results and an integrated system-hosted algorithm determines whether changes to the dosage need to be made, and the clinical staff is notified.

Benefits of this new system:

a) Close the heparin administration/testing workflow loop, thereby reducing the likelihood of dosing errors; and
b) Record infusion rate setting and related physiological data for the electronic medical record and to support Quality Assurance analysis.

Risks of this system: Time-stamping of blood draws, PTT tests and reports, and heparin infusion rate changes are not accurate enough to enable safe and effective decision support.

UC.4 ICE.4 - Smart alarm system

Current State:

Background: Cardiac (heart) surgery typically requires the use of cardiopulmonary bypass (CPB). During CPB, the CPB machine takes over both the pumping function of the heart and the ventilation function of the lung. Therefore, during CPB, the anesthesia machine ventilator is usually not needed, and is turned off to prevent unnecessary ventilation-induced lung movement that can interfere with surgery. During this period, physiological respiratory and circulatory monitors can be turned off or their alarm signals inactivated to prevent nuisance alarm signals. At the conclusion of the CPB period, the heart resumes pumping blood, and the CPB machine pump is stopped. Lung ventilation must be resumed prior to discontinuation of CPB or non-oxygenated blood circulates and can cause organ damage. The anesthesia/surgical team has to remember to resume ventilation and manually re-start the anesthesia ventilator. Patient injuries and deaths occur when the team forgets or delays resumption of ventilation. This is a longstanding problem that continues to occur Immediately CPB, the heart and other major organs can be especially susceptible to injury from poorly oxygenated blood.

Proposed State:

The anesthesia workstation ventilator, CPB machine, and physiological monitors are connected to an integrated system. The integrated system detects the transitions on and off CPB, and provides a smart alarm to warn the OR team if CPB terminates and lung ventilation has not resumed.

CConOps:

An adult patient enters the OR to undergo a coronary artery bypass graft procedure under CPB. The surgeons determine that CPB is required, and the perfusion team sets up the CPB machine and connects it to an integrated system. The anesthesia workstation and physiologic monitors are already connected to the integrated system. When the system detects that CPB has begun and that ventilation has been discontinued, it queries the via its user interface whether a “smart ventilation” alarm should be provided. The smart ventilation alarm would be activated if CPB flow decreases to less than 0.5 liters per minute for over 2 minutes. The smart ventilation alarm would remain engaged until CPB has stopped and ventilation has been detected continuously for 5 minutes.

Copyright © 2019: IHE International, Inc.

Benefits of this new system: Smart, contextually aware alarm system notifies the surgical team, thereby providing sufficient time for intervention to avoid patient injury.

Risks of this new system: Intentional transient reductions in CPB flow can create nuisance alarm conditions.

UC.5 ICE.5 - Decision support

Current State:

The Rapid Response Team (RRT)— known also as the Medical Emergency Team — is a team of who bring rapid response critical care expertise to the patient bedside (or wherever it is needed). Activation of the RRT is usually triggered by clinical observations and a series of physiological changes. These parameters are normally documented in the patient's chart, and the clinical staff does an RRT assessment when they perceive there is a problem with the patient (per Institute of Healthcare Improvement guidelines). Manual documentation, monitoring, and interpretation is usually ineffective in providing an early warning and intervention. "In one study, nearly of hospitalized patients with cardio-respiratory arrest had abnormal vital signs documented for up to hours before the actual arrest." Upon arrival at the patient's bedside, the RRT has to sift through all available information to formulate a differential diagnosis and treatment plan, potentially delaying appropriate interventions.

Proposed State:

With automatic collection and synchronization of medical device data with clinical observations, RRT assessment can be completed automatically every time patient data is collected. Decision support can be utilized to determine whether a patient is deteriorating and to automatically notify the clinical staff or activate a Rapid Response Team, depending on the severity of the score. Early detection and intervention should reduce cardio-respiratory arrest events and near-misses. Presentation of contextually relevant patient data, and updated, interactive or "dynamic" checklists, facilitate rapid diagnosis and effective treatment.

CConOps:

A patient is admitted into a non-acute care unit of the hospital. At the time of admission, clinical observations and vital signs are collected. The required values for each predetermined assessment are collected by the integrated system, which then calculates a Modified Early Warning System (MEWS) score. The MEWS score consists of respiratory rate, heart rate, systolic blood pressure, level of consciousness or sedation score, and hourly urine output. A bedside physiological monitor measures blood pressure at least every hour, at approximately the same time that the heart rate and respiration rate are collected. The nurse or clinical assistant performs a sedation assessment every 4 hours and enters the value into the integrated system. The integrated system utilizes an algorithm to calculate a MEWS score at hourly intervals. The MEWS-calculation algorithm compares these values and trends, alerts the clinical staff to changes in status and provides guidance regarding changes to the frequency of patient re-evaluation. Monitoring algorithms hosted by the integrated system automatically detect acute deterioration in patient status and alert (e.g. by pager) the RRT if necessary. Upon arrival at the patient's bedside, the integrated system presents the RRT with relevant current and historical physiological data, medication and allergy lists, and recent invasive procedures. The integrated system can present a differential diagnosis, cardiac arrest treatment algorithms, and support interventions with contextually checklists.

Copyright © 2019: IHE International, Inc.

Benefits of this new system:

a) Early warning of deteriorating patient condition; and
b) Decision support for the RRT to facilitate effective treatment.

Risks of this system:

a) Poor data quality undermines the effectiveness of the MEWS-calculation algorithm, which could lead to under- or over-alerting of the RRT; and
b) Staff dependency on the MEWS-calculation algorithm could lead to a reduction in clinical vigilance.

UC.6 ICE.6 - Physiological Closed Loop Control (PCLC)

Current State:

An elderly female with end-stage renal failure was given a standard insulin infusion protocol to manage her blood glucose, but no glucose was provided (either orally or intravenously). Her blood glucose to 33, then rebounded to over 200 after glucose was given.

Proposed State:

A patient is receiving an IV insulin infusion and is having the blood glucose continuously The infusion pump rate is automatically adjusted according to the real-time blood glucose levels measured, to maintain blood glucose values in a target range. If the patient's glucose level does not appropriately to the changes in insulin administration, the clinical staff is alerted.

CConOps:

A patient is receiving IV insulin via a syringe pump, glucose solution via a large-volume infusion pump, and a infusion pump of saline is serving as the intravenous carrier solution. The patient is also attached a continuous blood glucose monitor or an intermittent glucose monitor. At the time of connecting the patient to IV infusion, the nursing staff completes assessments of vital signs and IV line integrity. Subsequently, the large volume infusion pump (saline carrier), syringe pump (insulin), and blood glucose monitor are attached to an integrated system that queries the patient record for weight, target glucose range, typical insulin dosage range (and correction factor), and glucose responsiveness to meals (insulin-to-carbohydrate ratio). The integrated system-hosted physiologic closed-loop control (PCLC) algorithm delivers IV insulin to maintain the blood glucose values within the clinically desired range. The clinical staff is alerted if the glucose level changes unexpectedly or outside the limits determined by the system. In order to maintain the glucose levels within the target range, the system can also change the glucose infusion rate utilizing an integrated system-hosted algorithm. The algorithm would alert the clinical staff if the glucose levels exceed a range that the algorithm can manage by adjusting the insulin or glucose infusions.

Benefits of this new system:

a) facilitate maintaining blood glucose concentration in a normal range;
b) provide decision support to assist diabetes management; and
c) prevent life-threatening hypoglycemic events.

Risks of this new system:

a) Individual patients react to glucose differently and glucose management can be challenging; therefore the limits and values need to be specific to the patient; and

Copyright © 2019: IHE International, Inc.

b) Glucose levels rise and fall somewhat slowly and somewhat unpredictably, so these factors need to be considered by the system. (These issues are addressed more generally in IEC 60601-1-10)

UC.7 ICE.7 - Medical Device Plug-and-Play Interoperability (MD PnP)

Current State:

A forty-one-year-old, kg male underwent uneventful aortic valve replacement surgery and was transported to the ICU. His blood pressure (BP) was 130/70 mmHg and stable on arrival. He was placed on a lung ventilator following a routine ventilator pre-use system check. The ventilator settings were IMV = breaths/min, tidal volume of 1 l, FiO2 at 0.and zero positive-end expiratory pressure (PEEP). The ventilator was connected to the clinical information system so that device settings were observable at the central station and automated electronic health record documentation could be performed. Within 40 seconds of initiation of mechanical ventilation, acute hypotension developed (BP = 60/40 mmHg). Urgent evaluation by the surgical house staff focused on a presumed bleeding source or tension pneumothorax. Fortunately, evaluation by an respiratory therapist and an intensivist noted the breathing system airway pressure was increasing each breath, because the ventilator was not permitting full exhalation. The patient was immediately disconnected from the ventilator and lungs were manually ventilated with the transport ventilation system. Upon disconnection from the ventilator circuit, the patient's chest visibly decreased in diameter, with an immediate improvement in blood pressure and peripheral perfusion. The expiratory valve of the ventilator was found to be defective. A replacement critical care ventilator – produced by a different manufacturer - was connected to the patient and mechanical ventilation resumed. The first ventilator was connected to the clinical information system, but the replacement ventilator was developed by a different manufacturer, so although it had the ability to connect to the central station, it required specialized cabling and data mapping. These connections could not be completed in real time by hospital technicians, so manual documentation of ventilation was required and electronic observation was unavailable.

Proposed State:

Both the initial and the replacement critical care ventilator conform to open interoperable connectivity standards, and may be seamlessly connected to the clinical information system. Ventilator data is also available for remote display, documentation in the EMR, and a clinical decision support system.

CConOps:

An ICU patient is in need of mechanical lung ventilation. A sanitized ventilator is obtained from hospital inventory. The routine pre-use safety check is performed. The biomed inspection sticker is reviewed for currency. The interface sticker is reviewed for currency. A sanitized device interface cable is obtained from ICU inventory and connected to the ventilator and to the patient headboard-mounted MD PnP data port. Following power-on self-test, the ventilator confirms connectivity to the clinical information system. (If loss of connectivity it is displayed by the ventilator.)

Benefits of this new system:

Copyright © 2019: IHE International, Inc.

a) ventilator data is readily available for electronic documentation, remote display, and distributed alarms to improve documentation quality and enhance clinical vigilance and diagnosis, and
b) standards-based connectivity permits all conformant ventilators in hospital inventory to be available for use in clinical settings where data connectivity is important to patient care.

Risks of this new system: Expectation of seamless connectivity might not be met if device interface software and hardware are not kept current.

Copyright © 2019: IHE International, Inc.

C SDC/QH – Quiet Hospital (QH) Scenario and Use Cases

The Quiet Hospital approach is designed to reduce the amount of noise disturbance encountered in the typical medium and high acuity hospital care unit.

Sam, a nurse in University Hospital's high acuity intensive care unit is continuously bombarded with alert sounds emanating from a variety of medical devices including: infusion devices, ventilators, nurse call systems, patient monitors and/or associated central monitoring systems. This can result in alarm fatigue, especially since only a portion of these alerts are intended for her. In addition, Kelly – one of Sam's patients, hears many of the same alarm sounds increasing his overall level of stress as well as interrupting his rest.

The Quiet Hospital (QH) introduces the concept of "Alarm/Alert Delegation" which allows one medical device (usually SaMD) to act as an alarm proxy for other medical devices/sensors. For example, an SpO2 monitor, blood pressure monitor or infusion device on an SDC network can delegate its alarm signaling to a local patient monitor (on the same network). In turn, a ventilator and the patient monitor can delegate their alarm signaling to a central station. The central station (acting as a PCD AR or via an independent SDC device gateway acting as an AR) can, in turn, delegate the function of alarm signaling to an alert communications manager which sends alert notifications directly to Sam's smart phone or another personal device. This can result in reducing or eliminating the noise level in the care unit as well as the potential for alarm fatigue. The reduced noise level also reduces Kelly's level of stress and allows for uninterrupted periods of rest.

Given the possibility of communication errors or system failures which could affect patient safety, appropriate feedback loops must be in place to mitigate any hazards that may result in dropped Alerts or other malfunctions.

Finally, in order to support longer term alert logging and analysis of alert patterns a separate SDC to FHIR gateway can be installed to capture the alert traffic and "serve" results to interested applications.

Derived use cases include:

UC.8 SDC/QH.1 – Device alert signal delegation to single-pt. alert aggregator

An SpO2 sensor is attached to the SDC network. It announces its presence and the patient monitor on the network detects its availability. The care-giver is presented a screen which allows the option of having the patient monitor take over responsibility for signaling any alerts from the sensor.

UC.9 SDC/QH.2 – Single pt. alert aggregator alert signal delegation to multi-pt. aggregator

Copyright © 2019: IHE International, Inc.

A patient monitor and ventilator are attached to the SDC network. They announce their presence and the central station on the network detects their availability. The care-giver is presented a screen which allows the option of having the central station take over responsibility for signaling any alerts from these medical devices.

UC.10 SDC/QH.3 – Device alert signal delegation to Alert Communication Manager

A ventilator is attached to the SDC network. It is capable of acting as an IHE PCD ACM AR actor or it communicates to an SDC connected gateway which can act as an AR proxy. The device is configured to communicate and delegate handling of its alert signals to the ACM AM.

UC.11 SDC/QH.4 – Multi-pt. aggregator to Alert Communication Manager

A central station is attached to the SDC network. It is capable of acting as an IHE PCD ACM AR actor or it communicates to an SDC connected gateway which can act as an AR proxy. The central station is configured to communicate and delegate handling of its alert signals to the ACM AM.

UC.12 SDC/QH.5 – SDC to FHIR Gateway.

A developer has built a smartphone app which monitors the frequency of alerts within the care unit. The app uses the HL7 FHIR protocol to subscribes to alerts from an SDC to FHIR gateway.

UC.13 SDC/QH.6 – Alert Communications Manager to care-giver Alert Communicator

Sam (caregiver) carries a smartphone or other specialized personal device which can receive alerts from an IHE PCD ACM AC system. This device allows her to view alerts from her patients, and decide whether to go to the patient. In either case she can acknowledge the alert from her device.

UC.14 SDC/QH.7 – Alert Communicator (ACM AC) failure

If the ACM AC fails to communicate with the caregiver personal device, or if the ACM AC itself fails then all alert delegation relationships with the AM should be “broken” and the devices take over responsibility for alert notification.

UC.15 SDC/QH.8 – Alert Communications Manager (ACM AM) failure

If the ACM AM fails to communicate with the ACM AC, or if the ACM AM itself fails then all alert delegation relationships with the AM should be “broken” and the devices take over responsibility for alert notification.

UC.16 SDC/QH.9 – Multi-pt. aggregator failure

If the central station or other multi-pt. aggregator fails to communicate with the ACM AM or with the devices with which it has a delegation relationship, then all alert delegation relationships with the central station or other multi-pt. aggregator should be “broken” and the devices take over responsibility for alert notification.

UC.17 SDC/QH.10 – Single pt. aggregator failure

Copyright © 2019: IHE International, Inc.

If the SpO2 monitor or infusion device or other single patient sensor fails to communicate with the patient monitor, anesthesia machine or with the devices with which it has a delegation relationship, then all alert delegation relationships with the single-pt. aggregator should be "broken" and the devices take over responsibility for alert notification.

Copyright © 2019: IHE International, Inc.

D SDC/PDP - Preeclampsia (PDP) Scenario and Use Cases

Although SDC is optimized for highly acute care contexts, such as an emergency C-section delivery room, the information generated and consumed by SDC-enabled devices should be semantically interoperable with other systems across the continuum of care.

The Preeclapmsia During Pregnancy (PDP) clinical scenario below illustrates the role SDC plays within this overall care coordination scenario.

> *Holly, a pregnant mom, goes to the clinic for a regular check-up where hypertension + proteinuria are detected resulting in a diagnosis of preeclampsia. She is monitored for preeclampsia (hypertension) during the remainder of her pregnancy utilizing a personal health device (PHD) blood pressure monitor and urine analyzer. A Clinical Decision Support (CDS) system is integrated to help with the real-time monitoring of Holly's condition. After delivery (postnatal) everyone expected her blood pressure to return to normal within a few days or weeks; however, to ensure this is the case, as part of her discharge Holly is prescribed to continue her home monitoring regimen and the CDS system oversight is also continued. Shortly after her discharge, Holly's BP spikes which is detected by the CDS and the physician is alerted to action. It's a good thing that she was being actively monitored. The problems were quickly identified, her caregivers alerted, and she returned to hospital before the condition progressed to eclampsia and seizures.*

Derived use cases include:

UC.18 SDC/PDP.1 - In-hospital, at home and mobile / clinic care contexts

UC.19 SDC/PDP.2 - Acute point-of-care medical and personal health devices

UC.20 SDC/PDP.3 - Lab results including point of care devices and transactions

UC.21 SDC/PDP.4 - Location tracking and Device Identification / Association Management

UC.22 SDC/PDP.5 - A Cloud-based CDS system and "locally" networked systems & applications

Copyright © 2019: IHE International, Inc.

E SDC/FESS – Endoscopic Surgery Scenario and Use Cases

For the HIMSS20 Interoperability Showcase the following narrative based on a Functional Endoscopic Sinus Surgery procedure was developed in order to demonstrate the capabilities of SDC based surgical and anesthesia medical devices in a realistic scenario:

> *John Miller (13yrs, m) has chronic rhinosinusitis, which is an inflammatory condition in which the nose and his left maxillary sinus is swollen and the drainage of the mucus is prevented. John's chronic rhinosinusitis doesn't respond to medication anymore. After consulting with his physician, he and his parents decide to resolve the issue with a Functional Endoscopic Sinus Surgery (FESS). The FESS will be done in as a day surgery, so that John can get home in the evening.*
>
> *Before the day of the surgery, a CT scan is taken that is used to guide the surgeon during the surgery.*
>
> *In order for the surgery to start, John is put under general anesthesia and monitored with a patient monitor by a pediatric anesthesiologist, esp. his mean arterial blood pressure which has been reduced in order to provide optimal visibility of the surgical field due to reduced capillary bleeding.*
>
> *During the intervention, the Surgeon has a constant view of the patient's vitals (including MABP) and the control functions to execute the intervention.*
>
> *During the procedure one of the surgical devices has a technical issue. It generates a technical alert which notifies the responsible biomedical technician. He/she decides to replace the device and connects it to the network where it is automatically discovered and configured allowing the intervention to continue.*
>
> *There are no additional technical or clinical problems, the surgery is a success and John can go home with his parents.*

Derived use cases include:

UC.23 SDC/FESS.1 – Surgeon view of patient vitals

In addition to the anesthetist having the ability to view the patient vitals as well as the anesthesia related measurements, the surgeon has a similar real-time view. For the use case we just need some continuous measurements and no waveforms. Waveforms would be probably more interesting for a cardiac case. Statistically the overall latency has to be <= 300ms incl. time alignment between the sources.

UC.24 SDC/FESS.2– Surgeon control of OR table and lights

During the operation the surgeon will need to control the height of the OR table and the intensity of the OR lights. These are all connected via SDC and can be adjusted remotely by the surgeon.

UC.25 SDC/FESS.3– Surgeon control of surgical tools

Copyright © 2019: IHE International, Inc.

During the operation the surgeon needs to control the settings of {a surgical tool} and control the operation of the tool via a configurable foot switch. These are all connected via SDC and can be adjusted remotely by the surgeon.

UC.26 SDC/FESS.4 – Device reports technical issue to responsible BMET

During the procedure the surgeon loses the ability to cauterize with the surgical tool due to a malfunction. In the meantime, the surgical tool recognizes that there is a technical issue and automatically sends a technical alert to the responsible BMET.

UC.27 SDC/FESS.5 – Seamless exchange of Medical Devices

(Similar to NITRD.1) The BMET responds to the technical alert, and based on the alert, brings another surgical tool which he substitutes for the original failed unit. Once plugged into the SDC network, the surgical tool automatically connects to its peers and the foot switch discovers it. As a result, the surgeon regains the ability to cauterize and the procedure can continue.

Copyright © 2019: IHE International, Inc.

F NITRD – Medical Device Scenario and Use Cases

As discussed in the body of this white paper, NITRD published an RFI which presented their Future Vision of medical device interoperability.

> *When people with serious injuries or illness are hospitalized medical device additions and changes are automatically recorded with no deficit in patient safety, loss in data fidelity, or data security as the patient transitions across the continuum of care. Additional medical devices can be added or removed as the patient's status changes and details of these changes, calibration of the instruments, and each equipment's unique device identifier [UDI] and configuration settings are recorded and synchronized. If a piece of equipment breaks, it can be switched seamlessly with a device from another vendor. Data and settings from patient medical devices, such as insulin pumps, are identified, integrated, and time synchronized, and select data are included in the electronic health record. As autonomous capabilities are added, real-time care is logged, and supervisory control established to ensure the provision of real-time patient monitoring and support. When providers are not available, or have competing demands, medical devices will function in a closed loop, autonomous manner with appropriate safety and control measures to stabilize the patient. Data will flow through changes in equipment that occur in moves from the emergency room, to the operating room, to the intensive care unit, to a rehabilitation facility, and finally to the home. This will allow for data and metadata to flow even as changes in equipment are mapped to individual patient needs and environment. Each change in equipment configuration will be noted in the supervisory system/medical record and in the metadata (e.g., the UDI) generated by the device. The resulting patient record from these systems will include device data, metadata, and care documentation. These patient records can be stored and analyzed using medical black box recorder-equivalents to assess adverse events or examine unexpected positive outcomes. This will also improve the consistency and quality of care; create real-time automated care systems; create a learning health system.*
>
> *These types of records and the real-time systems interactions they enable are widely used or are being actively developed in other industries, such as the industrial controls and autonomous systems in the automotive, aviation, and energy sectors. That is not the case for healthcare. While there are many factors that may inhibit real-time interaction in a medical setting, interoperability solutions that are relevant for healthcare and patient safety need to be developed. Seamlessly flowing, interoperable data from medical devices and systems, when utilized effectively, could significantly enhance patient outcomes, identify and reduce errors, enhance the efficiency of care delivery, reduce development times and costs, improve standardization/consistency of care delivery, and decrease healthcare provider burnout.*

This white paper took the liberty of organizing the NITRD narrative into 7 distinct use cases as follows:

UC.28 NITRD.1 – Seamless changes of medical devices

Copyright © 2019: IHE International, Inc.

(Similar to SDC@HIMSS.1) If a piece of equipment breaks, it can be switched seamlessly with a device from another vendor.

UC.29 NITRD.2 – Capture of data and settings

Data and settings from patient medical devices, such as insulin pumps, are identified, integrated, and time synchronized, and select data are included in the electronic health record.

UC.30 NITRD.3 – Supervisory control established

As autonomous capabilities are added, real-time care is logged, and supervisory control established to ensure the provision of real-time patient monitoring and support.

UC.31 NITRD.4 – Autonomous patient therapy

When providers are not available, or have competing demands, medical devices will function in a closed loop, autonomous manner with appropriate safety and control measures to stabilize the patient.

UC.32 NITRD.5 – Data flows through the Continuum of Care

Data will flow through changes in equipment that occur in moves from the emergency room, to the operating room, to the intensive care unit, to a rehabilitation facility, and finally to the home. This will allow for data and metadata to flow even as changes in equipment are mapped to individual patient needs and environment.

UC.33 NITRD.6 – Capture of equipment configurations

Each change in equipment configuration will be noted in the supervisory system/medical record and in the metadata (e.g., the UDI) generated by the device.

UC.34 NITRD.7 – Black Box Recorder

The resulting patient record from these systems will include device data, metadata, and care documentation. These patient records can be stored and analyzed using medical black box recorder-equivalents to assess adverse events or examine unexpected positive outcomes. This will also improve the consistency and quality of care; create real-time automated care systems; create a learning health system.

Copyright © 2019: IHE International, Inc.

G OR.NET Use Cases

The following use cases were developed by the OR.NET project, which explored and prototyped the implementation of SDC based devices in an OR environment. (Note that some of the OR.NET UCs have been deprecated so that some numbers are missing.)

UC.35 ORNET.001 - Integration of anesthesia video data into (anesthesiologic) patient monitoring via radio transmission

UC.36 ORNET.004 - Indicates a warning from one OSCB-compliant device to another

UC.37 ORNET.005 - Transfer of the control of device A by a device B, which is actually prohibited

UC.38 ORNET.006 - User-specific workflow-dependent adjustment of the height of the operating table / foot step

UC.39 ORNET.009 - Display of electrophysiological signals on a monitor by a surgeon

UC.40 ORNET.010 - Use of a foot switch as an input device

UC.41 ORNET.012 - Display of force and moment sensor (KMS) for knee axis determination on central monitor

UC.42 ORNET.016 - Collision avoidance of devices

UC.43 ORNET.017 - Control of a desired manipulator by a common control console

UC.44 ORNET.018 - Power control of the milling machine at the middle

UC.45 ORNET.019 - Linking the surgical light to the endoscope

UC.46 ORNET.024 - Storage of intraoperative image data in the EHR

UC.47 ORNET.029 - Intraoperative input of monitoring data to EHR

UC.48 ORNET.030 - Display of monitoring data in microscope image

UC.49 ORNET.032 - Insertion of relevant information into the surgical microscope according to the clinical situation

UC.50 ORNET.035 - Central presentation of relevant device data / documents / patient data close to the site

UC.51 ORNET.040 - Single check-desk

UC.52 ORNET.042 - prevention of explosions

Copyright © 2019: IHE International, Inc.

UC.53 ORNET.043 - Controlling the US Dissector with the Human Machine Interface (MMI) of the microscope

UC.54 ORNET.050 - Service Total Log

UC.55 ORNET.051 - Visualization of instrument position

UC.56 ORNET.051 - Visualization of instrument position

UC.57 ORNET.067 - Fusion imaging intraoperatively US - CT / MRT

UC.58 ORNET.068 - Image-based communication.

UC.59 ORNET.069 - Monitoring of patient and device parameters, especially alarms

UC.60 ORNET.070 - Control of the anesthesiologically relevant device parameters.

UC.61 ORNET.072 - Import of clinical data from the EHR

UC.62 ORNET.073 - Storage of digital patient records in the EHR.

UC.63 ORNET.078 - Operating room preparation

UC.64 ORNET.079 - remote diagnostics remote maintenance firmware update

UC.65 ORNET.082 - Video display of selected parameters from external OSCB-compliant devices

UC.66 ORNET.084 - Transfer of a 3D volume image to a navigation system

UC.67 ORNET.086 - Storing an Endoscope Video

UC.68 ORNET.090 - Position adjustment C-arm and operating table

UC.69 ORNET.091 - Insertion of tumor borders into the microscope.

UC.70 ORNET.095 - Control of the endoscope light source via the navigation MMI

UC.71 ORNET.096 - Integration of B-Mode ultrasound into navigation

UC.72 ORNET.097 - Integration of 3D ultrasound into navigation.

UC.73 ORNET.100 - uploading patient strain data to the medical IT subnet

UC.74 ORNET.101 - Coupling of the footing height to the seat height

UC.75 ORNET.102 - Detection of OSCB compliant devices

Copyright © 2019: IHE International, Inc.

UC.76 ORNET.103 - Failure of OSCB compliant devices

UC.77 ORNET.104 - Logout of OSCB-compliant devices

UC.78 ORNET.105 - Automatic feeding of patient strain data to OSCB compliant device

UC.79 ORNET.106 - Enter the operator ID in the IT subnet

UC.80 ORNET.107 - Automatic input of operator code in OSCB-compliant device.

UC.81 ORNET.108 - Transfer of image data from the PACS to a monitor

UC.82 ORNET.109 - Create intraoperative screenshots.

UC.83 ORNET.110 - Transfer registration information from the navigation device to the robotic system

UC.84 ORNET.111 - Display additional information on the monitor of the navigation device

UC.85 ORNET.112 - Load planning image data from the PACS into the robotic system

UC.86 ORNET.114 - Recording and archiving of video data for documentation via a Frame grabber application

UC.87 ORNET.115 - Recording and archiving of video data for documentation via an IP data stream

UC.88 ORNET.116 - View of DICOM objects on any terminal with display function

UC.89 ORNET.117 - Patient and surgical centered DICOM object display

UC.90 ORNET.118 - Storage of DICOM objects in DICOM object-recording systems

UC.91 ORNET.119 - Control from a DICOM object viewer to change the layout of a display screen

UC.92 ORNET.120 - Linking the OP light to the C-arm

UC.93 ORNET.121 - Reconstruction of the OP Situs by laser measuring point.

UC.94 ORNET.122 - Power control of the vacuum cleaner on the central pipe.

UC.95 ORNET.123 - Derivation of the alarms of the surgical alarm system to the operating theater

UC.96 ORNET.124 - Alarm-triggered manipulation of the RGB room light

Copyright © 2019: IHE International, Inc.

UC.97 ORNET.125 - Show warning signals in videos of minimally / non-invasive imaging procedures

UC.98 ORNET.126 - Re-adjustment of preoperative CT data using intraoperative DVT

UC.99 ORNET.127 - Automatic orientation of the stereo camera

UC.100 ORNET.128 - Logging the Instrument Position During Optical Navigation

UC.101 ORNET.129 - Transfer of a log to the logistics system

UC.102 ORNET.130 - Integration of neuromonitoring of the ENT area into the optical navigation

UC.103 ORNET.131 - Adjust the position of the operating table using a navigated pointer

UC.104 ORNET.132 - Common control interface for all devices.

UC.105 ORNET.133 - Automatic documentation of device parameters: blood volume

UC.106 ORNET.134 - Automatic documentation of device parameters: surface dose.

UC.107 ORNET.135 - Combination of rotational angiography with electrophysiological measuring site

UC.108 ORNET.136 - CT / MRI linkage with TEE ultrasound in endoscopic mitral valve surgery

UC.109 ORNET.137 - Common operation of all room air-conditioning units from sterile workplaces

UC.110 ORNET.138 - Availability of all patients Information from sterile workplace

UC.111 ORNET.139 - Power control of an ultrasonic breaker

UC.112 ORNET.140 - Integration of neuromonitoring of the brain into the risk areas of optical navigation

UC.113 ORNET.141 - Integration of intraoperative ultrasound data of neurosurgery into the risk areas of optical navigation

UC.114 ORNET.142 - Adaptation of device parameters to vital parameters of patient

UC.115 ORNET.143 - Adaptation of device parameters to patient 's vital parameters

UC.116 ORNET.144 - Integration of the Laparoscopy and Endoscopy Tower

UC.117 ORNET.145 - Linking the surgical column and the operating table

UC.118 ORNET.146 - Warning if pressure is too strong on the ultrasound device

Copyright © 2019: IHE International, Inc.

UC.119 ORNET.147 - Change the US dissector parameters

UC.120 ORNET.148 - Remote triggering of US dissector device functionalities

UC.121 ORNET.149 - US dissector informs the microscope of its current trigger state

UC.122 ORNET.150 - Remote tripping of US dissector device functionalities

UC.123 ORNET.151 - Acoustic and visual feedback of intraoperative neuromonitoring during surgical procedures

UC.124 ORNET.152 - Transfer of video and image data

UC.125 ORNET.153 - Read image data from the PACS

UC.126 ORNET.154 - Uploading image data to the PACS

UC.127 ORNET.155 - File import from the EHR

UC.128 ORNET.156 - File export to the EHR

Copyright © 2019: IHE International, Inc.

H IHE PCD - Device to Enterprise Communication (DEC) Use Cases

UC.129 DEC.1 - Communicate patient identified DEC data to EMR/EHR

Data from all of the patient care devices associated with a particular patient is communicated by a Gateway, Device or Clinical Information System (CIS) implementing the DOR actor to an EMR/EHR, implementing the DOC actor. Examples include data from bedside monitors, ventilators, and infusion pumps. Discrete parameters representing both periodic and aperiodic data are typically communicated at an interval of no less than once per minute. The data is time stamped with a consistent time across the data from the respective patient care devices.

The primary intent is communication of structured data, however provisions are made for inclusion of unstructured data. The application provides facilities to bind an authoritative enterprise patient identifier required for inclusion of the PCD data in the patient record. The workflow for associating the authoritative enterprise patient identifier to the PCD data is outside the scope of the current PCD TF.

UC.130 DEC.2 - Communicate validated periodic DEC data to EMR/EHR

This Use Case builds on Case C1 by communicating only data which has been validated by a caregiver by identifying the caregiver in the PCD data. The workflow implementing validation is outside the scope of the current PCD TF.

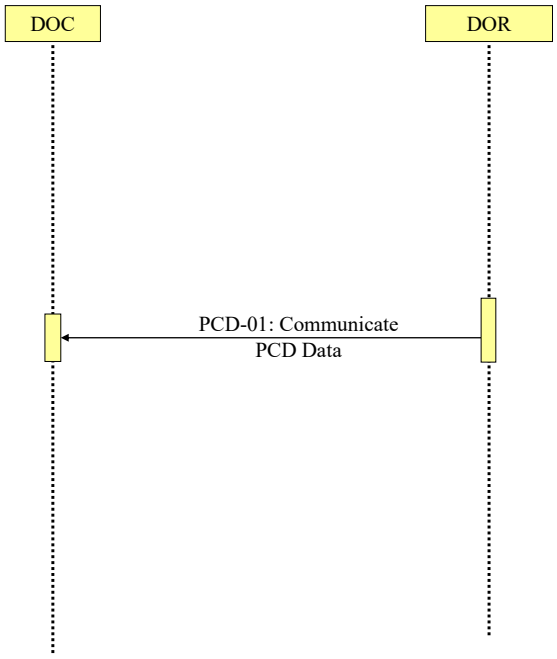

Figure: DEC Process Flow (No filtering)

Copyright © 2019: IHE International, Inc.

UC.131 DEC.3 - Use Cases for Automatic Patient Demographics Acquisition

The following examples describe which actors typical systems might be expected to support. This is not intended to define requirements, but rather to provide illustrative examples.

- A general purpose observation reporting gateway which combines the Device Observation Reporter and patient demographics.
- A patient care device which bundles the Device Observation Reporter and patient demographics.

Patient Demographic Data that can be used in identifying the patient includes the following:

- Partial or complete patient name (printed on the patient record or wrist band, or related by the patient)
- Patient ID (from printed barcode, bedside chart, RFID, scan, etc.)
- Date of Birth / age range

Note: Bed ID is not accepted by the Joint Commission as a means of patient identity verification.

Patient Identification Binding Use Cases: The caregiver connects the patient to a patient care device. The patient is physically identified by the caregiver, using some institutionally unique protocol for identification such as verification of information contained on a wristband. The caregiver uses the information from the physical patient identification to authorize an electronic identification, made by the device or an independent device or system, binding the patient's electronic identity to all data communicated from the patient care device. The verification may involve direct entry of data to the device being bound, a gateway, or an actor residing in a separate system. It may be based on direct physical identification of the patient by the caregiver, or on confirmation by the caregiver of an electronic identification made by the device in concert with other devices or systems. The verification may also include fully automated binding when a unique logical authentication can be made. The end result is that data communicated from the patient care device contains an authoritative institutionally unique electronic identifier.

UC.132 DEC.3.1 - Patient ID known in ADT, locally available

Note: The following are Use Cases in support of automatic acquisition of patient demographics. They do not map into any specific PCD profiles or transactions.

A patient is connected to a bedside monitor of a cardiac monitoring system (e.g., central station with continuous ADT feed via PAM broadcasts that includes a number of bedside monitors. The patient may or may not be able to provide positive ID information. Demographic information used to identify a patient includes: partial or complete patient name (printed on the patient record or told by the patient); Patient MRN (this may be obtained from printed barcode, a bed-side chart, etc.); Partial ID entry or scan; Date of birth / age range. *Note: Bed ID is not permitted as an identifier in accord with Joint Commission standards.)* Caregiver selects the patient from a pick list on the system console, in response to prompts by caregiver. System information includes showing the Medical Record Number (MRN), full name, age, sex, room/bed, and admit date. The central station binds the patient identity information with the device data.

UC.133 DEC.3.2 - Patient ID known in ADT, not locally available

Copyright © 2019: IHE International, Inc.

In the event that the patient above is not registered in the cardiac monitoring system, due to ADT lag or other situations, caregiver can execute a PDQ query of the patient registry to receive a pick list of patients and enter the patient ID into the system

UC.134 DEC.3.3 - Patient ID not known in ADT, locally available

This is the John/Jane Doe patient, for whom the system has set up a Proxy Identification. The Proxy Identification is determined by either method, in accord with institutional policy and later linked with the true patient ID via ITI-PAM.

UC.135 DEC.3.4 - Patient ID not known in ADT, not locally available.

This is the case of a patient presenting in the ER who is not registered in the system, where care must continue and identification may follow. When the patient demographics are unknown, time and device MAC address can be sent automatically, providing unique identification to the data. This last approach can also be used to create an audit trail as a complement to the other binding mechanisms.

UC.136 DEC.3.5 Other Clinical Examples

UC.137 DEC.3.5a – Association of Patient ID and Medical Device – via ID List

A patient is connected to an infusion device. The infusion device is connected to the network but is not managed by an infusion or drug administration management application. Caregiver scans barcode of the patient and the device. Caregiver is presented with a display of patient IDs from ADT and device ID from an authoritative database. Caregiver confirms.

UC.138 DEC.3.5b - Association of Patient ID and Medical Device – via patient wristband

A patient is connected to an infusion device. The infusion device is connected to the network but is not managed by an infusion or drug administration management application. No ADT feed is available to confirm the ID. Caregiver confirms patient's wristband identity through interactive communication with patient. The Patient ID wristband is scanned (barcode, RFID, etc.) and bound to the PCD.

UC.139 DEC.3.5c - Association of Patient ID and Medical Device – via RFID tags

A patient is connected to a ventilator. The ventilator is connected to the network but is not managed by a system. Ventilator and patient have RFID tags. Proximity of the tags implies binding of patient's ADT identification and device's ID from an authoritative database. Verification of an existing Order for a Ventilator for the identified patient is required. If verified, Patient Id is bound to PCD.

Copyright © 2019: IHE International, Inc.

I IHE PCD - DEC Subscribe to Patient Data (SPD) Use Cases

This Section describes the specific use cases and interactions defined for the DEC Workflow Profile. The Use Cases fall into two distinct groups based upon the choice to implement the optional Subscribe to PCD Data [PCD-02] transaction. The two groups are described below.

UC.140 SPD.1: Communicate patient identified data to EMR/EHR

Data from all of the patient care devices associated with a particular patient is communicated by a Clinical Information System (CIS) implementing the DOR actor to a EMR/EHR, implementing the DOC actor. Examples include data from bedside monitors, ventilators, and infusion pumps. Discrete parameters representing both periodic and aperiodic data are communicated to the CIS at an interval no less than 1 minute. The data is time stamped with a consistent time across the data from the respective patient care devices. The primary intent is communication of structured data, however provisions are made for inclusion of unstructured data. The application provides facilities to bind an authoritative enterprise patient identifier required for inclusion of the PCD data in the patient record. The workflow for associating the authoritative enterprise patient identifier to the PCD data is outside the scope of the current PCD TF.

UC.141 SPD.2 - Communicate validated periodic data to EMR/EHR

This Use Case builds on Case C1 by communicating only data which has been validated by a caregiver by identifying the caregiver in the PCD data. The workflow implementing validation is outside the scope of the current PCD TF.

UC.142 SPD.3 - Subscribe to patient data at specific periodic interval.

An EHR does not require data at the frequency that the Device Observation Reporter uses for default reporting. To receive data at an acceptable interval the EHR application makes a request of the Device Observation Filter for a subscription specifying the frequency or range of allowable frequencies at which Patient data should be sent to the EHR application.

UC.143 SPD.4 - Subscribe to patient data for specific patients.

A clinical research application is being evaluated for clinical decision support on a specific population of patients, for example. The application requests a subscription for patient data for a known group of patients appropriate to the study being conducted.

UC.144 SPD.5 - Subscribe to patient data for patients from a specific location.

A clinical application only wants to be informed of patient data for patients in a specific hospital unit, for example. The application requests a subscription for patient data for the hospital unit of interest.

UC.145 SPD.6 - Subscribe to patient data for a specific device or class of devices

A respiratory clinical decision support application only requires data from ventilators, for example. The application requests a subscription for patient data for ventilators.

UC.146 SPD.7 - Subscribe to patient data for specific parameters or class of parameters.

Copyright © 2019: IHE International, Inc.

A clinical decision support application is based upon correlation of a selected set of monitored Patient data. The application requests a subscription for only the Patient data of interest.

UC.147 SPD.8 - Request a snapshot of current or most recent patient data.

An EHR or other application requests a 'snapshot' of the current or most recent data for the patient. After the data is sent the connection is left open until closed by the DOC.

Copyright © 2019: IHE International, Inc.

J IHE PCD - Alert Communication Management (ACM) Use Cases

Alert Communication Management is meant to improve clinical efficiency by using technology to deliver the right alerts, with the right priority, to the right individuals via devices with the right content, and through configuration escalating communication of alerts to devices associated with other individuals.

The following are the use cases. The use cases are noticeably generic and not so much focused on the alert clinical purpose as they are focused on the system interactions. The use cases may be directly applicable to other IHE domains, and may be supplemented with additional use cases to serve specific needs in other domains.

UC.148 ACM.1 - Location Sourced

Use Case 1: Patient wants a pillow. Patient pulls nurse call. Nurse call system lights the room's dome light and light at central station. Nurse call system, operating as an Alert Reporter (AR) actor sends Report Alert [PCD-04] to Alert Manager (AM) indicating nurse call alert. The Alert Manager (AM) logs receipt of the alert. The Alert Manager (AM) identifies the appropriate nurse based upon configured nurse to patient assignments, identifies the appropriate Alert Communicator (AC) actor and destination communication device based upon nurse to device configuration in Alert Manager (AM), sends Disseminate Alert [PCD-06] to nurse's communication device. The Alert Manager (AM) logs the dissemination to the Alert Communicator (AC). The nurse receives the alert on their assigned device. The information minimally includes the patient location (room number). The nurse replies to the alert on the communication device, the Alert Communicator (AC) sends a Report Dissemination Alert Status [PCD-07] to the Alert Manager (AM). The nurse goes to the room, determines the needs of the patient, and provides the patient with a pillow. The nurse then resets the nurse call pull. The nurse call system turns off the room's dome light and the light at the central station. The nurse call system, operating as an Alert Reporter (AR) actor sends Report Alert [PCD-04] to Alert

Copyright © 2019: IHE International, Inc.

Manager (AM) indicating reset of the nurse call alert. The Alert Manager (AM) receives the alert turns off any configured alert escalation and logs the alert.

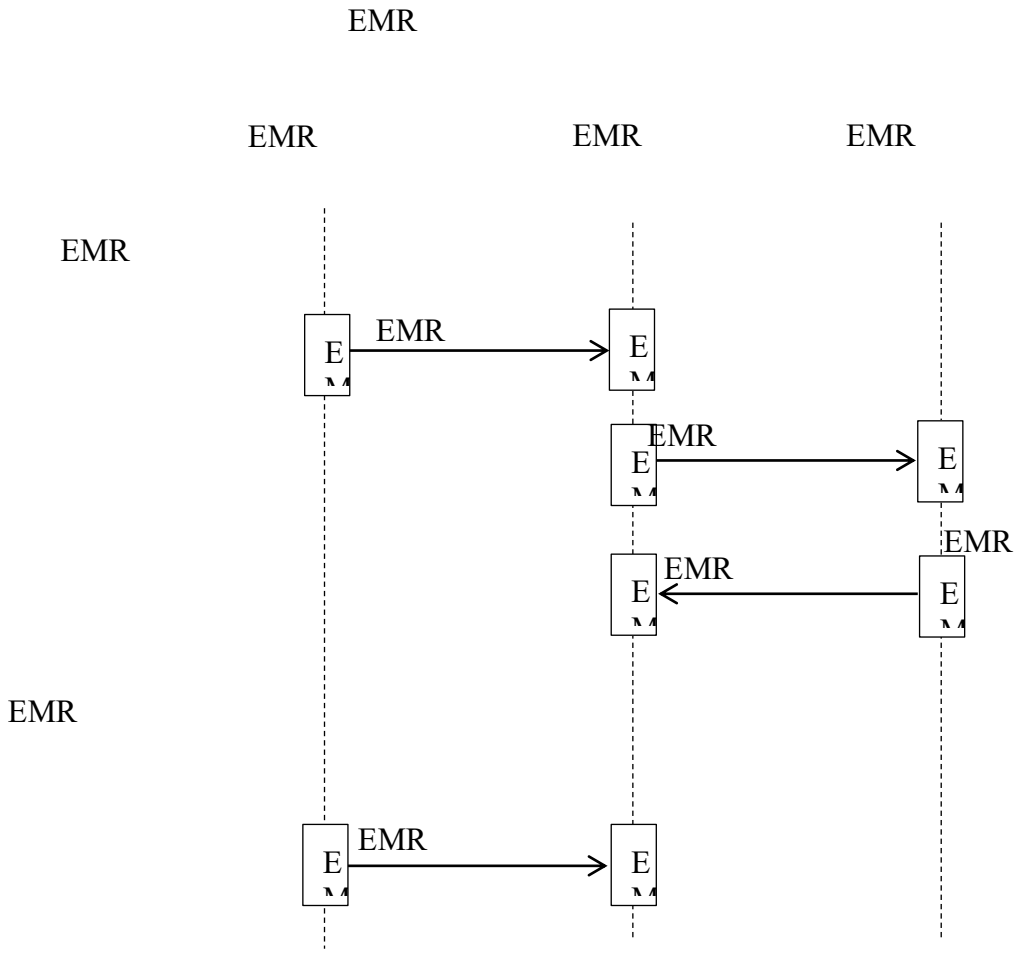

UC.149 ACM.2 - Identified Patient Source

Alert occurs on PCD assigned to patient. PCD or PCD gateway system, operating as an Alert Reporter (AR) actor sends Report Alert [PCD-04] to Alert Manager (AM) indicating PCD alert. The Alert Manager (AM) logs receipt of the alert. The Alert Manager (AM) identifies the appropriate nurse based upon configured nurse to patient assignments, identifies the appropriate Alert Communicator (AC) actor and destination communication device based upon nurse to device configuration in Alert Manager (AM), sends Disseminate Alert [PCD-06] to nurse's communication device. The Alert Manager (AM) logs the dissemination to the Alert Communicator (AC). The nurse receives the alert on their assigned device. The information minimally includes the patient identification. The nurse replies to the alert on the communication device, the Alert Communicator (AC) sends a Report Dissemination Alert Status [PCD-07] to the Alert Manager (AM). The nurse goes to the room, determines the needs of the patient, and responds to the PCD alert. The nurse then clears the PCD alert. The PCD or PCD gateway system, operating as an Alert Reporter (AR) actor sends Report Alert [PCD-04] to Alert

Copyright © 2019: IHE International, Inc.

Manager (AM) indicating reset of the PCD alert. The Alert Manager (AM) receives the alert turns off any configured alert escalation and logs the alert.

UC.150 ACM.3 - Same as ACM.1/ACM.2 with Escalation with Cancel at Alert Source

(Same as use case 1 or 2 with escalation with cancel at source) if the communication destination is inaccessible or the target individual is indicated as unavailable, then the alert is rerouted to one or more alternatives with escalation to higher levels of responsibility until the alert is canceled at its source and the alert system notified of the cancel.

UC.151 ACM.4 - Same as ACM.1/ACM.2 with Escalation with Cancel at Communication Endpoint

(Same as use case 1 or 2 with escalation with cancel of any active Alert Manager (AM) escalation actions at communication endpoint) if the communication destination is inaccessible or the target individual is indicated as unavailable then the alert is rerouted to one or more alternatives with escalation to higher levels of responsibility until the alert is canceled by a recipient at a communication endpoint.

UC.152 ACM.5 - Same as ACM.1/ACM.2 with Escalation with Cancel at AM

(Same as use case 1 or 2 with escalation with cancel of any active Alert Manager (AM) escalation actions at alert management system) if the communication destination is inaccessible or the target individual is indicated as unavailable then the alert is rerouted to one or more alternatives with escalation to higher levels of responsibility until the alert is canceled by a user on the Alert Manager (AM), however not automatically via algorithms in the Alert Manager (AM).

UC.153 ACM.6 - Information with no destination other than logging by the AM

The use case for this is to log information from the Alert Reporter (AR) with the Alert Manager (AM) and not to disseminate the information to the Alert Communicator (AC). The information can be information meant to be used in concert with alerts received from the Alert Reporter (AR), or for logs or information not meant for dissemination to users, but used in reporting alert environment after the fact.

UC.154 ACM.7 - Equipment Sourced Alert

The use case for this alert is to communicate medical equipment management events from devices when those events are not patient focused, such as battery low or failure to charge or malfunctioning of alerts. Such indications are device specific, patient independent, and potentially location independent.

Copyright © 2019: IHE International, Inc.

K IHE PCD - Medical Equipment Management Device Management (MEMDMC) Use Cases

If the observations identified in this profile are added to messages of existing profiles then conformance to this profile is not required. However if the destination of the observations is not in conjunction with a device associated patient or are meant to be received by an equipment management system (CMMS) this conformance to this profile is required.

UC.155 MEMDMC.1 - Equipment Observations to CMMS

In this use case equipment observations are sent to the CMMS, whether or not the equipment is currently associated with a patient.

If the observation is of a condition for which notification of a person is required for prioritized attention then that should be an additional alert notification to an ACM AM and this profile is not appropriate, simply define a new alert and add the observation to it as an ACM PCD-04 transaction.

Depending upon information in the observation sent to the CMMS the CMMS can choose originate an ACM PCD-04 advisory alert transaction as an ACM AR actor in order to get someone to tend to an equipment issue.

UC.156 MEMDMC.2 - Equipment Observations to CMMS

When a piece of equipment undergoes a status or configuration change, or ends a battery charging cycle, or executes a self-test and has a status to report it reports it as an observation. The following is a sample list of situations under which observations would be reported. This is not a complete list as new observations are expected to be able to be accommodated without updating this profile. If equipment location tracking information is available (where embedded or through coordination with a gateway) that information can be included as additional observations in this transaction without adopting the MEMLS profile.

- Equipment power up (a last seen indication)
- Equipment network configuration is about to change (in case the change takes it offline)
- Equipment power transitions from mains to battery or back to mains (in case of battery failure)
- Self-test status is being reported and whether it failed or not (last known health)
- Battery status/level for all batteries is being reported (last known battery health)
- Battery charging success is being reported (last known battery health)

This is not the reporting of a patient associated operational event as would be accomplished using an Event Communication (EC) associated profile or device specialization, such as Infusion Pump Event Communication (IPEC).

This is not the reporting of an Alert for response by a person as that would be accomplished by the Alert Communication Management (ACM) profile.

Copyright © 2019: IHE International, Inc.

L IHE PCD - Medical Equipment Management Location Services (MEMLS) Use Cases

UC.157 MEMLS.1 - Communication of location observations in conjunction with other non-location related transactions

This is the addition of location observations in the same transaction with non-location related transactions, such as DEC PCD-01, ACM PCD-04, and IPEC PCD-10.

Use Case Description

This presumes that the reporting piece of equipment or system is location aware and so has the location information to include in with its other observations. This can be accomplished either by embedding the location tracking capability into the equipment or by using a gateway external to the device and to the location tracking system to merge the information into a single device observation plus location observation message.

Process Flow

A producer (DEC DOR or IPEC DOR or ACM AR) is producing an observation (evidentiary data, alert, or event) and is location aware and includes location as an observation in with the rest of the observations. The device or system is made location aware either through an embedded location tag or by querying an external system that is aware of the location of a tag physically external to the device or system producing the observation. Such transactions are outside the scope of this profile and are addressed by the existing DEC, ACM, and IPEC profiles.

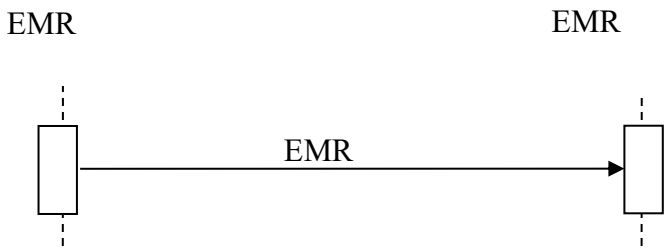

Figure X.4.2.1.2-1: Basic Process Flow in MEMLS Profile

Main Flow

Copyright © 2019: IHE International, Inc.

An observation, alert, or event has occurred and a device or system will be producing a profile related transaction (PCD-01, PCD-04, or PCD-10). The device or system is location aware and will include location as an additional observation in the transaction.

UC.158 MEMLS.2 - Communication of location observations in conjunction with LS specific events

This is the addition of location observations in the same transactions with location related transactions, such as DEC PCD-01 and ACM PCD-04. These are LS specific and not patient specific.

Use Case Description

This presumes that the reporting piece of equipment or system is location aware and so has the location information to include in with its other observations.

Process Flow

A producer (DEC DOR or ACM AR) is producing an LS specific observation (evidentiary data, alert, or event) and is location aware and includes location as an observation in with the rest of the observations. The device or system is made location aware either through an embedded location tag or by querying an external system that is aware of the location of a tag physically external to the device or system producing the observation.

Copyright © 2019: IHE International, Inc.

M IHE PCD - Waveform Content Module (WCM) Use Cases

Please note that to fully implement these Use Cases additional PCD workflows will need to be addressed which can then apply WCM for the communication of waveform information.

UC.159 WCM.1 - Alarm Waveform Snapshot

A patient, post Heart Attack, is walking in his room while being monitored using a patient telemetry system. The system detects a run of ventricular beats and generates an alarm at the central nurse station. In parallel, the alarm information including the waveform, parameter data and alarm information is acquired by a separate alarm communication system which then sends the appropriate information snapshot to a caregiver's portable device.

UC.160 WCM.2 - Real-Time Waveform Viewing

A physician would like to review the current status of a patient including his parameter information, waveforms, device settings, etc. He brings up an application on his PDA or personal computer and can view the current information delayed by a maximum of 10 seconds.

UC.161 WCM.3 - Archived Waveform Viewing

A physician starting his rounds would like to review the waveforms and associated data for a patient under his/her care. He/she accesses an archive which has stored the continuous waveforms and related vital signs and other parameter data over the past 24 (or more) hours.

UC.162 WCM.4 - Mixed Snapshot and Continuous Waveform Viewing

A Remote Monitoring Station, responsible for checking on monitored outpatients, receives an alert on one of its patients. The alert is accompanied by a waveform snippet at the time of the event. If further investigation of the current status of the patient is required, a continuous waveform can be viewed.

UC.163 WCM.5 - Waveform Snapshot to EHR

The user of an EHR requests a snapshot of a waveform from the device.

UC.164 WCM.6 12 - Lead ECG

A patient enters the Emergency Room complaining of pressure on the chest wall. A 12-lead ECG is obtained and transmitted via WCM to the Cardiology Management System. The data is reviewed and annotated and sent via WCM to the hospital Clinical Information System as part of the patient's clinical record. (This use case is out of scope. Please refer instead to the Resting ECG Workflow profile from the IHE Cardiology domain.)

Copyright © 2019: IHE International, Inc.

N IHE PCD - Retrospective Data Query (RDQ) Use Cases

UC.165 RDQ.1 - Query for all retrospective data on a single patient.

Scenario: Consider a patient in critical care unit for a period of time (perhaps several hours to several days). A clinician requests history of all patient-specific physiologic data from time patient arrived in critical care unit to current time. This, start time is time of arrival in unit in the past. Hence, start time reflects the time in the past (wildcard) current time. Result of query is summary of all cross-device data available on patient for presentation in some user interface in either columnar or graphical (trending) format. The figure below is the reference diagram for this use case.

Process Flow: The query is typically initiated from and by either a clinical information system (CIS) or a clinical decision support system (CDSS) in which the RDC queries for retrospective data on at least one patient. Initiation of the query can be explicit or implicit based upon synchronizing with other data within EMR. PCD-12 transaction initiated from RDC to RDR formulated to contain request for all data in past, interpreted from time of patient arrival in unit. RDR responds to query with all available data from the time patient admitted to a room and bed.

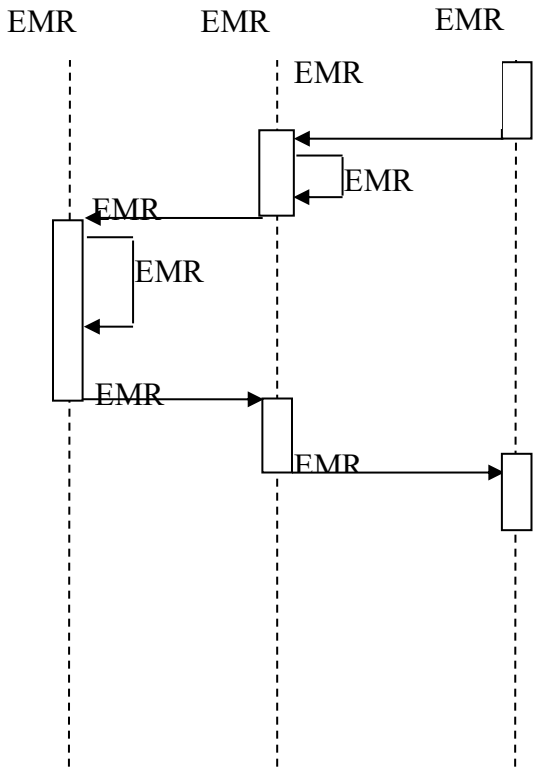

Figure: Basic Process Flow in Query for all retrospective data on a single patient

UC.166 RDQ.2 - Query for all retrospective data on multiple patients.

Copyright © 2019: IHE International, Inc.

Scenario: Consider one or more patients in critical care unit for a unique period of time (perhaps several hours to several days). A clinician requests history of all patient-specific physiologic data from time patients arrived in critical care unit to current time. This request may initiate for any of a number of reasons. For instance, to assess the onset of sepsis; to support a clinical study, etc.

Clinical event causes clinician to request all data from time of Event to current time. Historical data would comprise all patient-specific physiologic data from time of that Event (from time of patient arrival) to current time. Result of query is summary of all cross-device data available from the time of that specific event to the current time. The figure below is the reference diagram for this use case.

Process Flow: Query initiated by clinician to RDC requesting all data on all patients from wildcard to current time. Initiation of query can be explicit or implicit based upon synchronizing with other data within EMR. PCD-12 transaction initiated from RDC to RDR formulated to contain request for all data in past, interpreted from time of patient arrival in unit. RDR responds to query with all available data from the time patients admitted to bed.

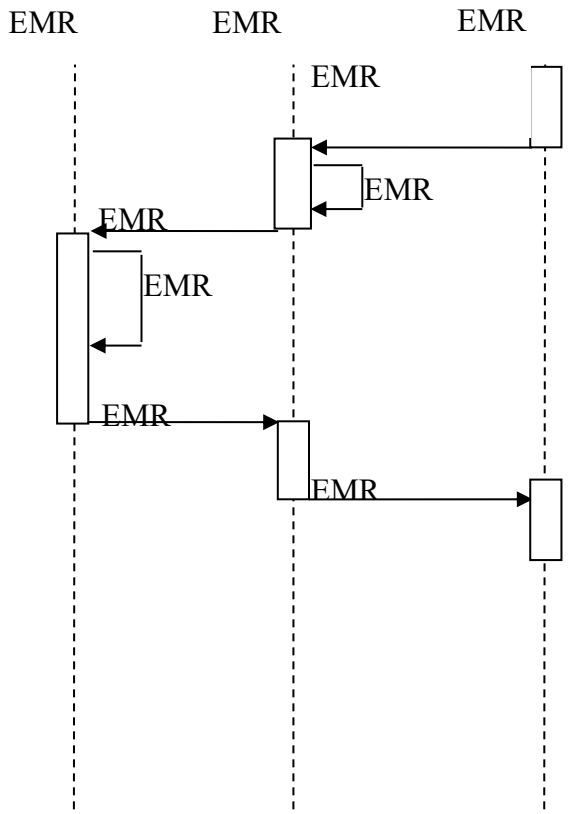

Figure: Basic Process Flow in Query for all retrospective data on multiple patients

UC.167 RDQ.3 - Query for retrospective data on a single patient within a specified time interval.

Copyright © 2019: IHE International, Inc.

Scenario: Consider a patient in critical care unit for a unique and defined period of time (perhaps several hours to several days). A clinician requests history of all data from this patient for this unique period of time, or time interval (t1, t2). The figure below is the reference diagram for this use case.

Process Flow: Query initiated by clinician to RDC requesting all data on patient within interval (t1, t2). Initiation of query can be explicit or implicit based upon synchronizing with other data within EMR. PCD-12 transaction initiated from RDC to RDR formulated to contain request for these data in past. RDR responds to query with all available for time interval, or null if no data available.

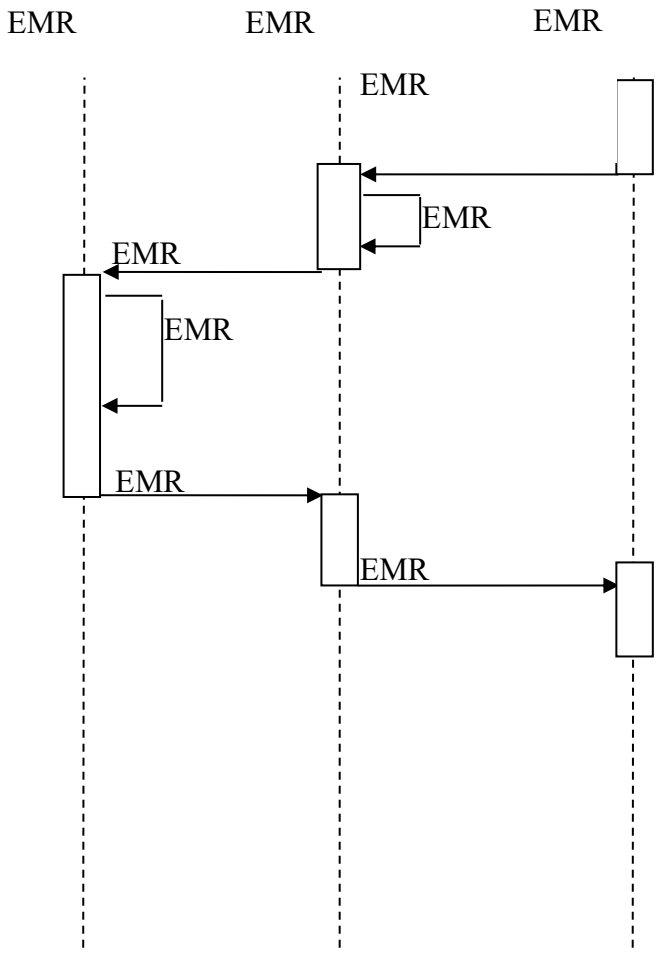

Figure: Basic Process Flow in Query for retrospective data on a single patient within a specified time interval in the past

UC.168 RDQ.4 - Query for retrospective data on multiple patients within a specified time interval.

Copyright © 2019: IHE International, Inc.

Scenario: Consider multiple patients in critical care unit for a unique and defined period of time (perhaps several hours to several days). A clinician requests history of all or a subset of all data from all patients for this unique period of time, or time interval (t1, t2). The figure below is the reference diagram for this use case.

Process Flow: Query initiated by clinician to RDC requesting all data on all patients within interval (t1, t2). Initiation of query can be explicit or implicit based upon synchronizing with other data within EMR. PCD-12 transaction initiated from RDC to RDR formulated to contain request for these data in past. RDR responds to query with all available for time interval, or null if no data available.

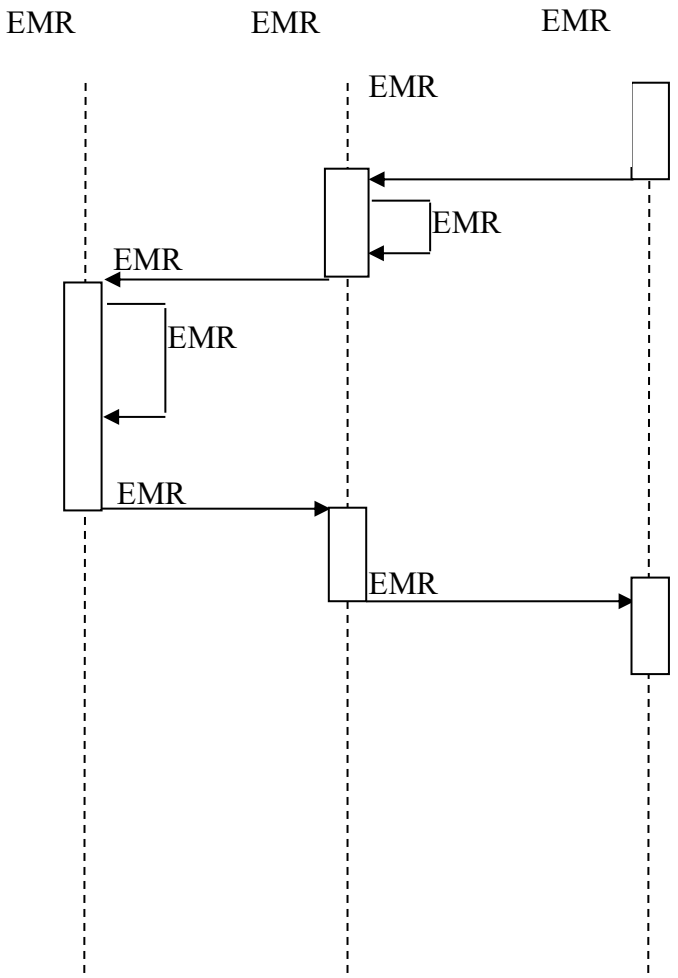

Figure: Basic Process Flow in Query for retrospective data on multiple patients within a specified time interval in the past

UC.169 RDQ.5 - Query for retrospective data on 1 or more parameter elements on a single patient.

Scenario: Consider a patient in critical care unit for a period of time (perhaps several hours to several days). A clinician requests history of heart rate (HR) & respiratory rate (RR) from time

Copyright © 2019: IHE International, Inc.

patient arrived in critical care unit to current time. This, start time is time of arrival in unit in the past. Hence, start time reflects the time in the past (wildcard) current time. Result of query is summary of all HR & RR data available on patient for presentation in some user interface in either columnar or graphical (trending) format. The figure below is the reference diagram for this use case.

Process Flow: Query initiated by clinician to RDC requesting HR & RR on patient from wildcard to current time. Initiation of query can be explicit or implicit based upon synchronizing with other data within EMR. PCD-12 transaction initiated from RDC to RDR formulated to contain request for all HR & RR data in past, interpreted from time of patient arrival in unit. RDR responds to query with all available HR & RR data from the time patient admitted to bed.

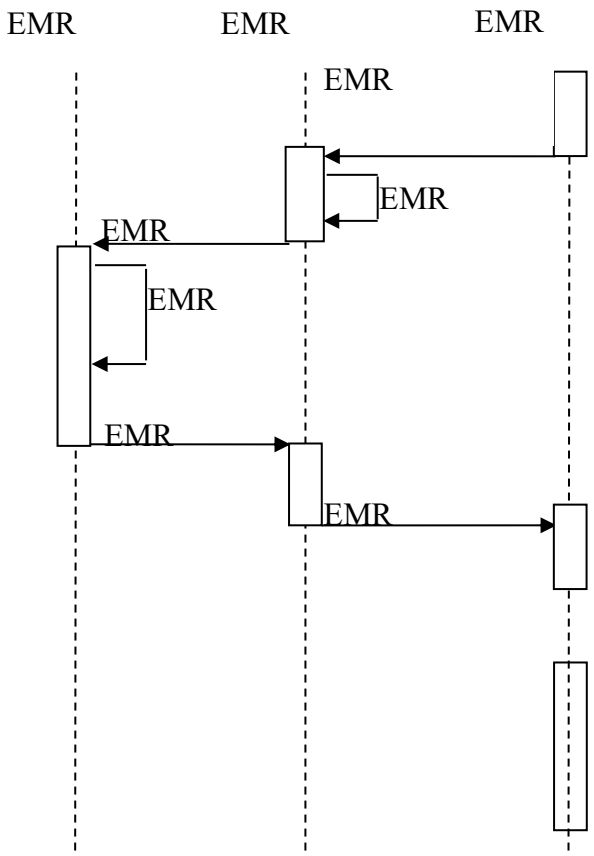

Figure: Basic Process Flow in Query for retrospective data on 1 or more parameter elements on a single patient for all time in the past

UC.170 RDQ.6 - Query for retrospective data on 1 or more parameter elements on multiple patients.

Copyright © 2019: IHE International, Inc.

Scenario: Consider a patient in critical care unit for a period of time (perhaps several hours to several days). A clinician requests history of HR & RR data on all patients from time since they arrived in critical care unit to current time. This, start time is time of arrival in unit in the past. Hence, start time reflects the time in the past (wildcard) current time. Result of query is summary of HR & RR data available on multiple patients for presentation in some user interface in either columnar or graphical (trending) format. The figure below is the reference diagram for this use case.

Process Flow: Query initiated by clinician to RDC requesting all HR & RR data on patient from wildcard to current time on all patients. Initiation of query can be explicit or implicit based upon synchronizing with other data within EMR. PCD-12 transaction initiated from RDC to RDR formulated to contain request for data in past, interpreted from time of patients' arrivals in unit. RDR responds to query with all available data from the time patient admitted to bed.

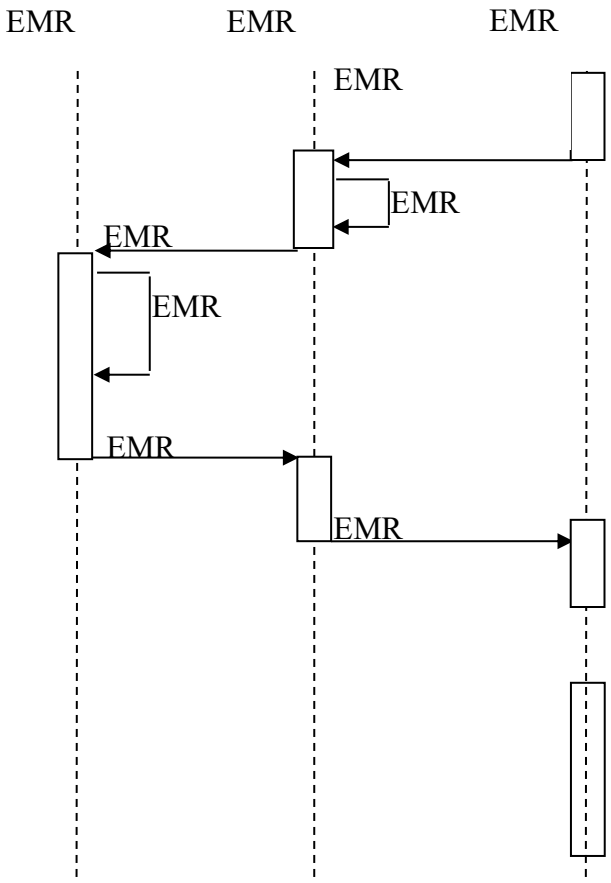

Figure: Basic Process Flow in Query for retrospective data on 1 or more parameter elements on multiple patients for all time in the past

UC.171 RDQ.7 - Query for retrospective data on 1 or more parameter elements on a single patient within a specified time interval.

Copyright © 2019: IHE International, Inc.

Scenario: Consider a patient in critical care unit for a period of time (perhaps several hours to several days). A clinician requests history of HR & RR data on one patient for time interval (t1, t2). The figure below is the reference diagram for this use case.

Process Flow: Query initiated by clinician to RDC requesting all HR & RR data on patient for time interval (t1, t2). Initiation of query can be explicit or implicit based upon synchronizing with other data within EMR. PCD-12 transaction initiated from RDC to RDR formulated to contain request for specific data in past, from t1 to t2.

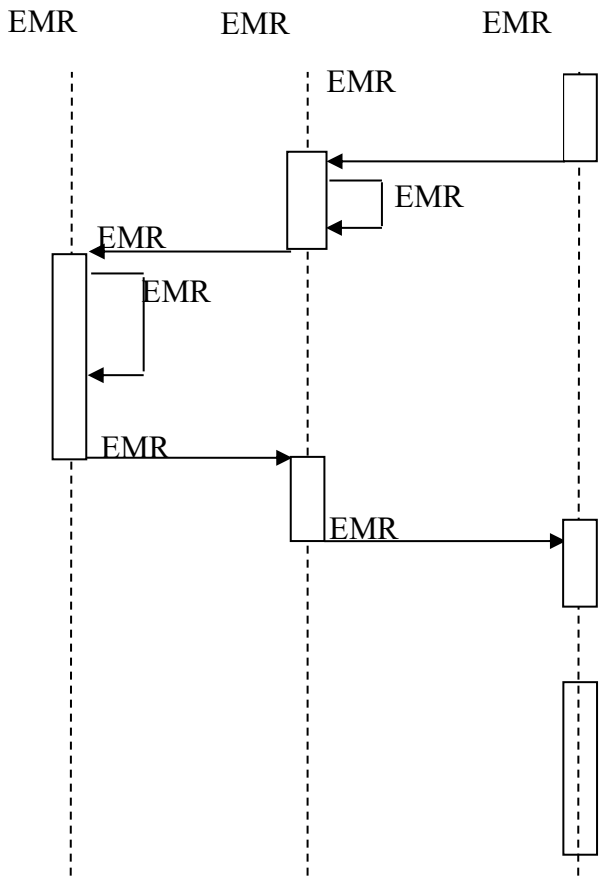

Figure: Basic Process Flow in Query for retrospective data on 1 or more parameter elements on a single patient within a specified time interval in the past

UC.172 RDQ.8 - Query for retrospective data on 1 or more parameter elements on multiple patients within a specified time interval.

Scenario: Consider multiple patients in critical care unit for a period of time (perhaps several hours to several days). A clinician requests history of HR & RR data on all patients for time interval (t1, t2). The figure below is the reference diagram for this use case

Copyright © 2019: IHE International, Inc.

Process Flow: Query initiated by clinician to RDC requesting all HR & RR data on all patients for time interval (t1, t2). Initiation of query can be explicit or implicit based upon synchronizing with other data within EMR. PCD-12 transaction initiated from RDC to RDR formulated to contain request for specific data in past, from t1 to t2.

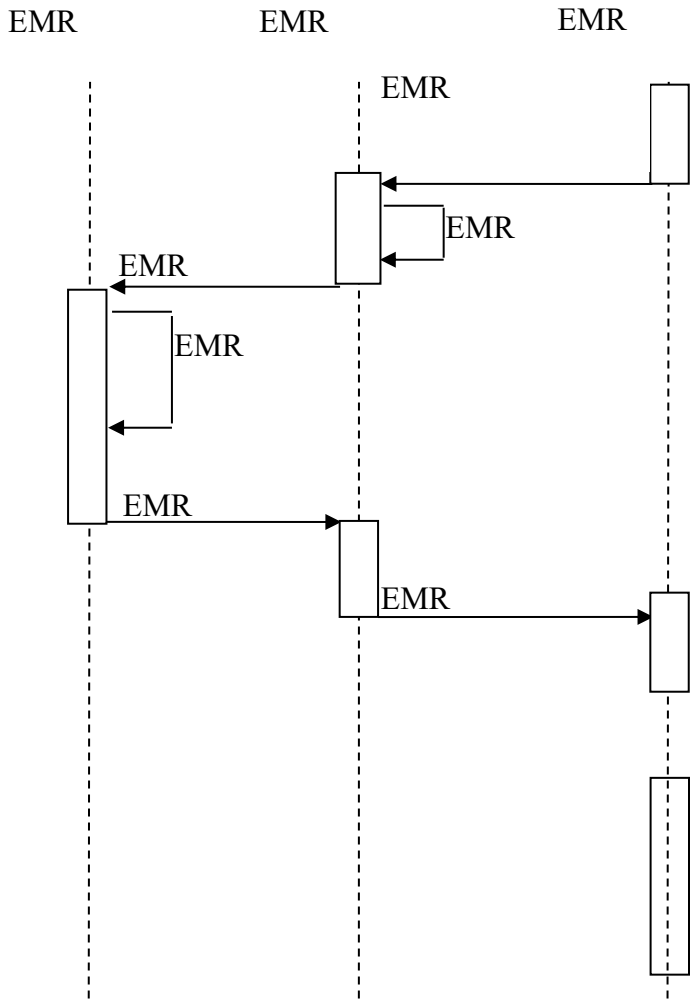

Figure: Basic Process Flow in Query for retrospective data on 1 or more parameter elements on a single patient within a specified time interval in the past

Copyright © 2019: IHE International, Inc.

O IHE PCD - Implantable Device Cardiac Observation (IDCO) Use Cases

UC.173 IDCO.1 - Implantable Cardiac Device In-Clinic Follow-up

Clinical Context:

Alex Everyman presents at the implantable cardiac device follow-up clinic for his appointment. Alex will present for follow-up 7-10 days after implant and every 3-6 months thereafter, depending on the therapy protocol.

Dr. Tom Electrode, a cardiac physician, and Nicci Nightingale, a registered nurse (R.N.), work in the implantable cardiac device follow-up clinic.

Nicci interrogates the device using a cardiac device programmer. The programmer extracts the device data (e.g., settings, status, events) from the device. Nicci reviews and verifies the device data and initiates a transfer of the data from the programmer to a translator system. A necessary subset of the data that represents a summary is converted by the translator system from a proprietary data format to a standard HL7 format. The data is then transmitted using HL7 messaging to the EHR or device clinic management system.

This summary data is sent as an unsolicited observation message.

Notes:

1. In the area of Electrophysiology, a "programmer" is a commonly used term to describe a specialized computer that is capable of communicating with an implanted device. Programmers are used to interrogate implanted devices (as are “interrogators”) and "program", or make changes to the cardiac device settings.
2. In this use case the translator system is a clinical information computer system that can receive proprietary structured data from the programmer and perform the necessary transformation and communication protocols to communicate effectively with the EMR.
3. Electrocardiograms are not currently addressed in the HL7 standards. They can be sent as a PDF attachment to the HL7 message.

IHE Context:

In the use case the translator system equates to the Implantable Device – Cardiac – Reporter actor and the EHR or device clinic management system equates to the Implantable Device – Cardiac – Consumer actor. The HL7 formatted cardiac device message is the [PCD-09] transaction.

UC.174 IDCO.2 - Implantable Cardiac Device In-Clinic Follow-up with Networked Programmer that Translates Information

Clinical Context:

Same as in-clinic use case above with the following change. The programmer communicates directly with an EHR or device clinic management system, acting as a translator system.

IHE Context:

Copyright © 2019: IHE International, Inc.

Same as in-clinic use case above with the following change. The programmer assumes the role the actor Implantable Device – Cardiac – Reporter.

UC.175 IDCO.3 - Implantable Cardiac Device Remote Followup

Clinical Context:

Portions of the previous use case also apply to Alex Everyman having his device followed remotely. Alex will present to an interrogation device located outside of the clinic (e.g., in Alex's residence) which will capture the state of his implanted device and will transmit the information to a translator system. The translator system converts the data into an HL7 message and communicates the summary data to the clinic's EHR.

IHE Context:

Same as in-clinic use case 6.3.1 above. It is recommended that the Implantable Device – Cardiac – Reporter actor be grouped with the Secure Node actor of the ATNA Profile to secure communications for remote follow-ups if data is sent across an un-trusted network.

UC.176 IDCO.4 - Remote Monitoring of Implanted Cardiac Devices

Clinical Context:

The translator system described in use case IDCO-3 may be implemented as a service, e.g., the device manufacturer or a monitoring service. This system may collect data provided on a periodic basis to enable early detection of trends and problems, or provide other event information. This system may also provide various types of value-added services, such as data aggregation and analysis, trending, statistical reports, and the ability to review and verify data before sending to the EMR. Depending on user selectable settings in the translator system, detailed information concerning the current status of the patient and reports may be sent to the recipient system.

IHE Context:

The same as the Remote Follow-up use case above. The additional data aggregation or rendering can be sent as a PDF attachment to the HL7 message.

These types of value-added services are likely to be provided by a party that will send the results over the Internet. It is recommended that the Implantable Device – Cardiac – Reporter actor be grouped with the Secure Node actor of the ATNA Profile to secure communications for remote follow-ups if data is sent across an un-trusted network.

IDCO Process Flow

Copyright © 2019: IHE International, Inc.

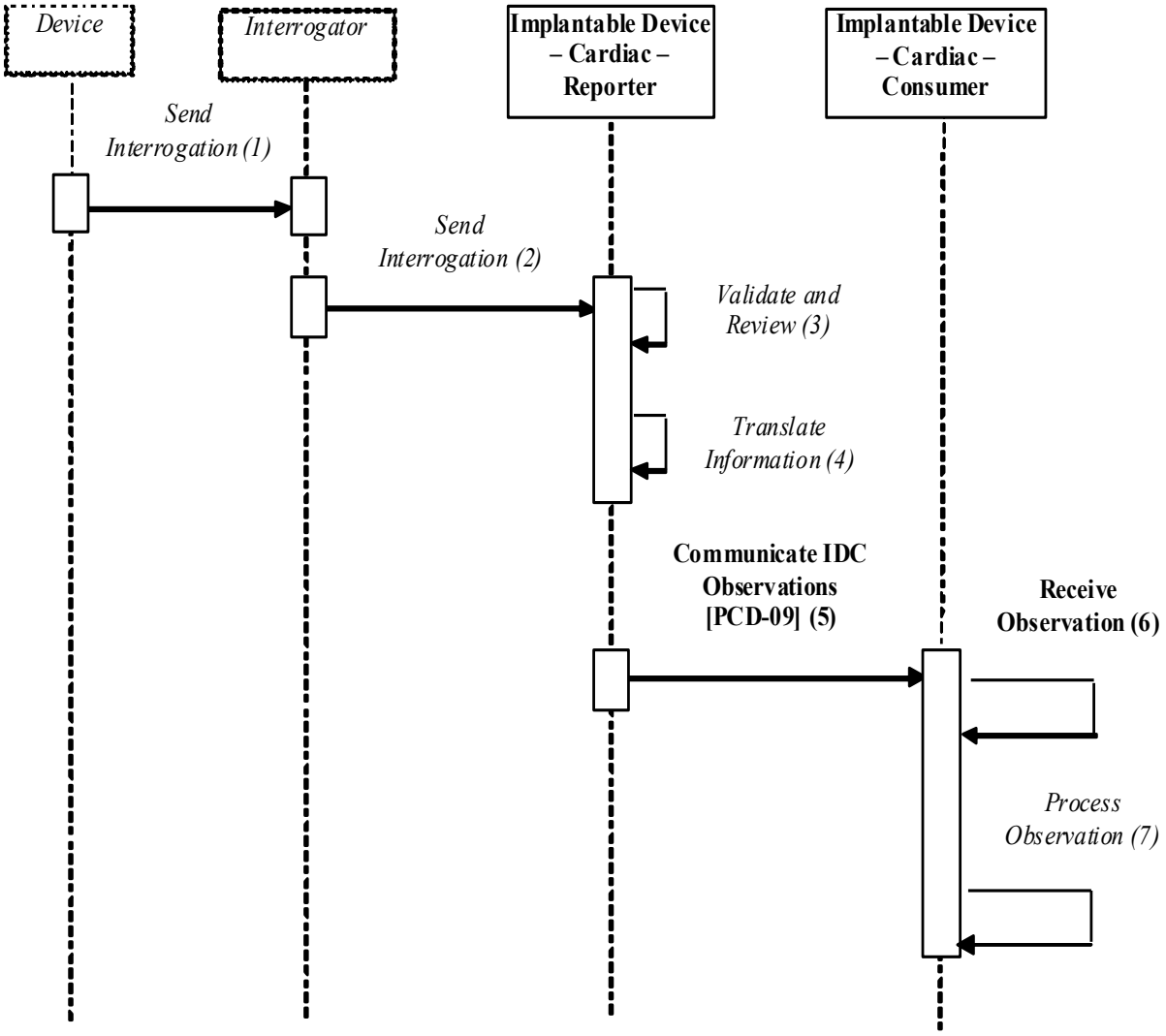

Figure 6.4-1: Basic Process Flow in IDCO Profile

Note: Device, Interrogator, and steps 1 thru 4, 6 and 7 are informative and are not formal actors or transactions of the IDCO profile.

1. Send Interrogation – The Device sends information in a manufacturer-proprietary manner to the Interrogator.
2. Send Interrogation – The Interrogator sends information in a manufacturer-proprietary manner to the Implantable Device – Cardiac – Reporter.
3. Validate and Review – The Implantable Device – Cardiac – Reporter validates the information. This may include the clinician reviewing and approving the information.
4. Translate Information – The Implantable Device – Cardiac – Reporter translates/maps/transforms the information into the proper HL7 format.
5. Send Observation – The Implantable Device – Cardiac – Reporter sends the device information to the Observation Consumer using the [PCD-09] transaction.

Copyright © 2019: IHE International, Inc.

6. Receive Observation – The Implantable Device – Cardiac – Consumer receives the observation message.
7. Process Observation – The Implantable Device – Cardiac – Consumer further processes the observation message for inclusion within derivative products, such as clinical reports, databases, or trans-coded / reformatted results.

IDCO Patient Identification Considerations

This profile assumes a pre-coordinated association of identifiers across the two Patient Identifier Domains: the device manufacturer systems providing the observations and the clinics receiving the observations.

Depending on local regulations each implantable cardiac device manufacturer may be obligated to maintain a registry that maps a unique device identifier with the patient in which it is implanted. In some locales this mapping is the strict responsibility of the implanting or other organization. Specific patient identification information is typically not stored in the device but is made available in the registry or by other means. Consequently the Implantable Device – Cardiac – Reporter is only required to send this identifier which represents the patient to device relationship for an implanted device as part of the [PCD-09] transaction. This identifier by normative convention is the concatenation of a unique industry wide manufacturer id, unique manufacturer model number, and unique manufacturer serial number.

This profile specifies one actor, the Implantable Device – Cardiac – Consumer, as the endpoint for observation messages. The Implantable Device – Cardiac – Consumer will have pre-coordinated a cross-reference of patient identifiers across the two Patient Identifier Domains. This will be done by storing the unique device identifier within the patient's record. This will typically be the patient's unique identity but could be the patient's location in emergency situations.

In some cases the Implantable Device – Cardiac – Reporter will have detailed patient identification information like name, address, etc. In these cases the Implantable Device – Cardiac – Reporter can send this information as part of the [PCD-09] transaction.

Copyright © 2019: IHE International, Inc.

P IHE PCD - Point-of-Care Infusion Verification (PIV) Use Cases

UC.177 PIV.1 – Transfer of infusion parameters from BPOC to infusion device

The goal of the proposed integration is to bring infusion systems into the electronic medication administration process. The following primary steps comprise this process:

- Order medication
- Verify Order for Inclusion in the eMAR
- Prepare and Dispense Medication
- Administer Medication

While medication errors can occur at each point in this process, this proposal is concerned with the "Administer Medication" step, where half of the errors made by clinicians involve infusions. These errors usually involve a breech of one of the 5 Rights of Medication Administration:

- Right Patient
- Right Drug
- Right Dose
- Right Route
- Right Time

It is the caregiver's responsibility to ensure that these rights are reviewed prior to administering each drug or starting each infusion.

Safety Infusion Systems are designed to reduce the error rates associated with infusions through the use of one or more of the following smart pump features:

- The ability to check programmed doses against pre-configured limits in an onboard drug library
- The ability to read infusion parameters from barcode segments
- The ability to receive infusion parameters wirelessly

The Point-of-Care Infusion Verification profile supports the electronic transfer of infusion parameters from a Barcode Point of Care (BPOC) system, also known as a Bar Code Medication Administration (BCMA) system, to an infusion pump. This capability will reduce errors by eliminating keystroke errors and by increasing the use of automatic dosage checking facilitated by onboard drug libraries. In addition to the reduction of medication administration errors, this integration may also increase caregiver productivity and provide more contextual information regarding infusion data.

Electronic transfer of infusion status information from a pump to a clinical information system can be accomplished using the PCD-01 (Communicate PCD Data) transaction of the IHE-PCD Device Enterprise Communication profile.

The goal of the proposed integration is to bring infusion systems into the electronic medication delivery process.

Copyright © 2019: IHE International, Inc.

The use case includes the following steps (note that steps 2 and 3 may not necessarily occur in the order specified):

1. Clinician uses BPOC to administer an IV
2. Clinician identifies self, medication, patient, pump
3. Clinician confirms or edits infusion parameters for an IV medication order using the BPOC
4. Infusion parameters are transmitted to pump
5. Clinician confirms settings directly on pump and starts infusion

Copyright © 2019: IHE International, Inc.

Q IHE PCD - Infusion Pump Event Communication (IPEC)

UC.178 IPEC.1: Communicate event data to EMR/EHR

Data from all of the patient care devices associated with a particular patient is communicated by a Gateway, Device or Clinical Information System (CIS) implementing the DOR Actor to an EMR/EHR, implementing the DOC Actor. This document only covers event data received from infusion pumps. Discrete parameters representing the device's state at or near the time of the event are included. The data is time stamped with a consistent time across the data from the respective patient care devices. The primary intent is communication of structured data; however, provisions are made for inclusion of unstructured data. The application provides facilities to bind an authoritative enterprise patient identifier required for inclusion of the PCD data in the patient record. The workflow for associating the authoritative enterprise patient identifier to the PCD data is outside the scope of the current PCD TF.

Copyright © 2019: IHE International, Inc.

R IHE PCD - Point-of-Care Identity Management (PCIM) Use Cases

Properly validated associations between devices, and patients that the devices are sourcing observations for, are an essential underpinning for clinical surveillance and clinical decision support systems. Patient safety depends on certainty that the values being charted do not have gaps, or worse, data from the wrong patient. This profile provides standards-based messages for communications about the beginning, end, and current state of intervals in which a device is associated with a particular patient. It uses HL7 version 2 messages, still the most common pattern in healthcare institutions for similar information such as patient demographics. It does not specify a particular configuration of systems for its functions, but rather describes roles which may be assigned to different systems according to the workflow in the institution. For example, selection of the patient and the devices could be accomplished on a module of an electronic medical record system, on a medical device such as a physiological monitor or ventilator with appropriate communication and display capabilities, or on a hand carried device controlling another healthcare information system.

UC.179 PCIM.1 - Associating Device with Patient

Description

An authorized person at the point of care and able to see the patient and the devices has gathered and checked the unique identifying information for a patient and one or more devices that are designated to originate observations on that patient. Before being sent, the information is displayed to the operator for verification. Once verified, a message is originated by the Association with the following information:

- Patient identifier unique within the scope of the institution
- Method of data capture (for example, scanned device bar code and patient wrist band, fixed device location, etc.)
- Time parameters (typically effective begin time of the association. In the case where only a single set of observation from the device is expected, as for a spot-check monitor, the end time of the association is simultaneous with the beginning time)
- Authorized performing participant

Process Flow

This use case can be driven by an authorized user responsible for entering, verifying, or both, the beginning and ending of an association between a device and a particular patient. The should be based on first person awareness of the situation at the point of care. Automatic Identification and Data Capture methods such as barcodes or RFID should be used to assist the workflow and increase data reliability to the maximum feasible extent. In certain circumstances and with appropriate risk analysis, the association may be automatically generated. For example, a device with its own “admission” process, the act of manipulating the user interface at the point of care to “admit” a patient to the device may be deemed a patient-safe way of generating validated information of this device-patient association. For another example, a device with a fixed location and a known patient associated with the location may be appropriate to originate a device-patient association. These means of identification are specific to the clinical environment in question, and standard procedures of risk analysis at the institution should be applied to assure that patient safety is adequately protected.

Copyright © 2019: IHE International, Inc.

Pre-conditions:

Patient is to be associated with a device for clinical observations. Patient has been assigned unique identifier at registration which has been collected and verified at the point of care. Device identify has been registered for use. The identities of patient and device(s) have been collected and verified by an authorized person.

Main Flow:

Device-Patient Association reporter originates a message with the specific information on the association and its time of beginning. When such an association message is received, the manager system is responsible for determining if any conflicting information is in the system and generating an appropriate error message to assist the responsible personnel in resolving the conflict.

Post-conditions:

After completion of this use case, an association record identifying the patient and the associated device and giving the start time of the association is created and persisted by the Device-Patient Association Manager.

UC.180 PCIM.2 - Disassociating Device from Patient

Description

At the time the device is no longer set up to make observations on the patient, the Device-Patient Association Reporter originates a message conveying this information to the Device-Patient Association Manager. It should be noted that even though this may be a less salient event at the point of care, completeness and accuracy of disassociation is as important to an accurate record and proper association of observations with patients. This is a key issue in risk analysis and in system design.

Process Flow

The Device-Patient Association Manager receives the information that the association between a particular patient and one or more devices no longer exists. An authorized operator may originate this message through a user interface. In some cases, the device itself is capable of determining that the association has been broken and can communicate this information directly to the Device-Patient Association Manager, or indirectly through the Device-Patient Association Reporter. It may be appropriate to note this event on a user interface and get confirmation that it is correct. It also could be appropriate to ask whether other devices on record as being connected to the same patient are still connected or not.

UC.181 PCIM.3 - Query for the Devices for a Patient

Description

A Device-Patient Association Consumer may query a Device-Patient Association Manager for a list of devices associated with a particular patient at present, or at a designated time in the past, or more generally for a snapshot of the Device-Patient Association map.

Process Flow

For status display or for error-checking and diagnostic purposes, the Device-Patient Association Manager can respond to a targeted query by sending a query response message.

Copyright © 2019: IHE International, Inc.

UC.182 PCIM.4 - Query the Associated Patient for a Device

Description

A device (or another system) may require the identity of the patient it is connected to, for display or other purposes, but not have this information available to it, so the profile provides for a Device-Patient Association Consumer to query the Device-Patient Association Manager for this information.

Process Flow

The identity of the patient associated with a device (or the lack of an associated patient identity) may be queried for.

UC.183 PCIM.5 - Device Registrant Registers a Device

Description

Identification and supporting information about a device may be registered with the Manager.

Process Flow

Before a device can participate in a Device-Patient Association, its identity and basic attributes such a device type, manufacturer and model, and additional identity information such as its regulatory Unique Device Identifier are provided by the Device Registrant to the Device-Patient Association Manager to be persisted and used in the other transactions in this use case.

UC.184 PCIM.6 - Query the Device Registrant for a list of candidate devices for an association

Description

A Device Registrant in the present might be used by Device-Patient Association Reporter to allow presentation of a pick list of candidate devices to be paired with a patient

Copyright © 2019: IHE International, Inc.

S CEN/TC 251/PT5-021 (VITAL) Use Cases

Introduction

This standard has been developed to normalize "Vital Signs Information Representation" The goal is to facilitate and make possible the development of a profile of communication standards for measurement and therapeutic devices used in medical environments such as intensive care and anaesthesia.

The standard covers the information model, that is the vital signs representation and data model. From an ISO/OSI communication reference model viewpoint this covers a part of layers 6 and 7 (application and presentation) of the 7-layer communication stack (note that Vital Signs Representation does not specify location and access methods which are also layer 7 functions).

This Annex presents a set of scenarios in which vital signs (and biosignal) data of different types are communicated from one medical device to another. The scenarios discuss the medical environment, the types of data that need to be transferred, and the dynamics of the data that need to be transferred.

The scenarios presented are all typical of work within the healthcare environment and are relevant to the general problem of data exchange within this environment; but is not intended to deal with all these required data classes. The final section discusses how the scope of standard maps onto the various scenarios that were presented.

This document describes the scenarios using a non-specific approach. Rather than talking about specific setups in specific institutions or care areas, the scenario is described in a more generic fashion. Once the scenario has been described, potential applications are specified.

The scenarios are arranged, for the most part, such that they progress from the basic to the more complex. There is an attempt to have each scenario build on the previous one, adding either additional requirements or constraints.

The Data Requirements developed through analysis of each scenario have been summarized in the following table:

Table: Data Requirements

Data Class	and Type	Example	PT5-021?	Scenario
Waveform Values and Validity				
	Electrophysiology	ECG, EMG, etc.	Y	#1
	Blood Pressure	Arterial, Pulmonary, etc.	Y	#4
	Brain Activity	EEG	Y	#1
	Ventilation	Respiration, Airway Flow, etc.	Y	#4
	Anaesthetic Agent	Halo, Enfl, etc.	Y	#4
	Respiratory Gas	CO2, O2, etc.	Y	#4
	Evoked Potential	VEP, MEP, SEP, etc.	Y	#1
	Intracranial Pressure	ICP	Y	#1
Parameter Values and Validity				

Copyright © 2019: IHE International, Inc.

Data Class	and Type	Example	PT5-021?	Scenario
	Cardiac	HR, ST, R-R, etc.	Y	#2
	Arrhythmia	ARR., V/min, Rhythm,	Future?	#4
	Hemodynamic	Px S/D/M, CO, NP, etc.	Y	#2
	Hemo. Calculations	SV, SVR, CI, etc.	Future?	#2
	Intracranial Pressures	ICP, CPP, BPP, etc.	Y	#2
	Respiratory Gas	N2O, CO2, EtCO2	Y	#2
	Blood Gas	SpO2, SvO2	Y	#2
	Ventilation	Resp Rate, PIP, PEEP, PP, etc.	Y	#2
	Evoked Potential	VEP, MEP, SEP, etc.	Y	#1
	Lab Results	Electrolytes, pH, etc.	N	#2
	Weight	Patient, Urimeter, etc.	Y	#2
Other Parameter Information				
	Alerts	Technical Alerts	Y	#3
	Alarms	Severity, Annunciation, ...	N	#4
	Event Annotations	Freeform	Y	#8, #9
	Data Archive	Transfer of stored data	Y	#8
	Data Archive Interactive	Stored Data retrieved interactively	N	#9
Ability to View Settings				
	Alarms	High/Low, On/Off	Y	#4
	Waveforms	Gain, Filter, Reporting Rate	Y	#4
	Parameters	Reporting Rate, Algorithm	Y	#4
	Ventilator	Resp. Rate, Airway Pressure, etc.	Y	#4
	Infusor	Infusion Rate, Infusate,	Y	#4
Ability to Modify Settings				
	Alarms	Silence, Reset, On/Off, Limits	Future?	#5
	Waveform	Gain, Filter, Reporting Rate	Future?	#5
	Parameter	Reporting Rate, Algorithm	Future?	#5
	Ventilator	Resp. Rate, Airway Pressure, etc.	Future?	#5
	Infusor	Infusion Rate, Infusate,	Future?	#5
Demographic Information				
	Bed ID	'n' character room/bed identification	Y	#6
	Unit ID	'n' character care unit identification	Y	#6
	Notes	Freeform text (Dx, Rx, ...)	Y	#8
	Patient Demographics	Name, ID, DOB, etc.	Y	#8

UC.185 VITAL.1 - Data Logger - Single Device

Copyright © 2019: IHE International, Inc.

Overview

In this scenario, see Figure below, there is a one-to-one relationship between the manager device collecting the data (the device or data logger) and the agent device producing the data (the server). This scenario is applicable to many of the research environments such as sleep laboratories, electrophysiology laboratories, etc.

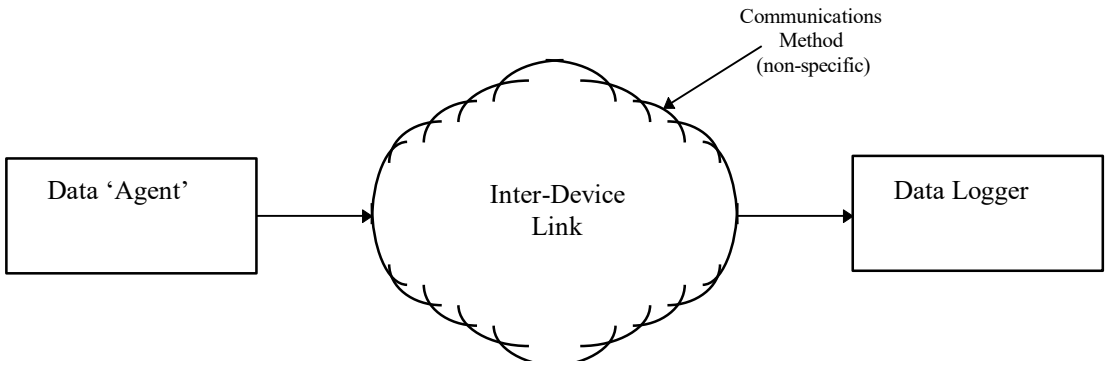

Figure: Data Logger - Single Device

Examples

EXAMPLE 1: Digital EEG data collection.

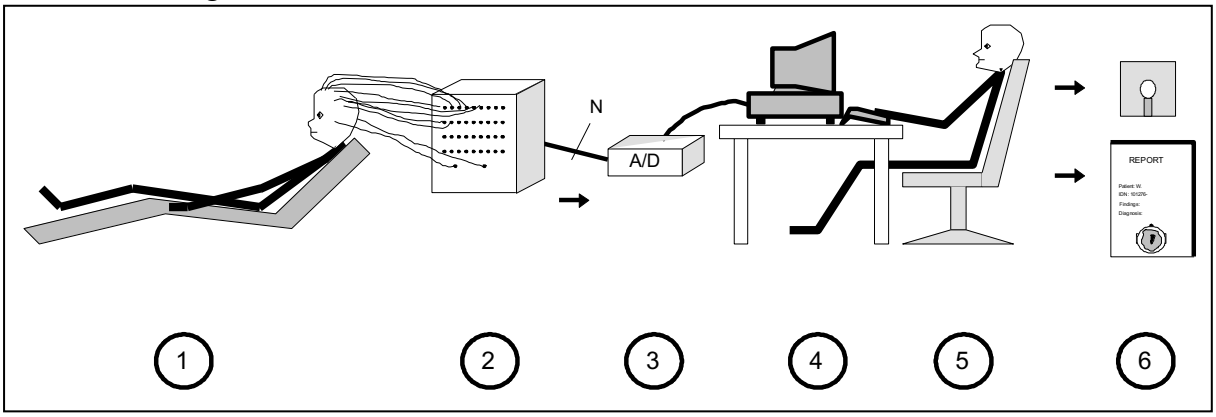

Figure: Typical Digital EEG Application Scenario

FigureThe Figure shows that about 20 electrodes are attached to the scalp of a patient (1). The microvolt level EEG signals are amplified with an analog amplification device to Volt level (2), converted by an A/D converter (3), and collected by a computer (4). A technician (5) supervises the recording. The recorded signals may be displayed on screen. Analysis results are included in a report (6). Data may be stored on disk or digital tape for archival purposes (6).

EXAMPLE 2: Ambulatory EEG/ECG monitoring (normally referred to as Holter EEG or ECG).

Copyright © 2019: IHE International, Inc.

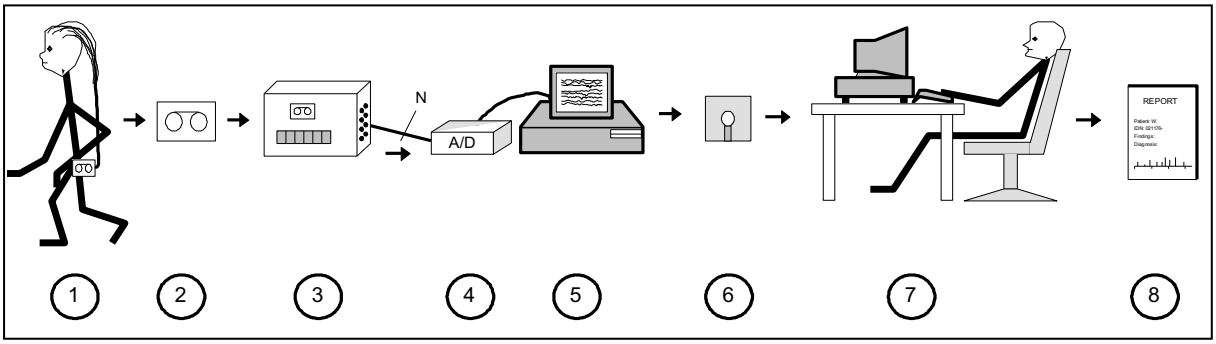

Figure: Typical Ambulatory EEG Application Scenario

The Figure shows that a patient (1) carries an ambulatory recorder, which collects EEG and possibly other physiological signals (continuously, e.g. over 24 hours). The signals are amplified and prefiltered in the recording device and stored on analog tape (2). For reconstitution of the data the tape is inserted into a tape playback device (3). An A/D converter (4) converts the analog voltages to digital signals, which may be displayed on screen for technical quality control. A computer (5) collects the data. The data may be stored on a large capacity storage medium, e.g. an optical disk (6). A technician or a physician analyses the collected signals visually and/or by means of an analysis program (7). A report (8) is generated which contains the analysis results.

EXAMPLE 3: Sleep Laboratory.

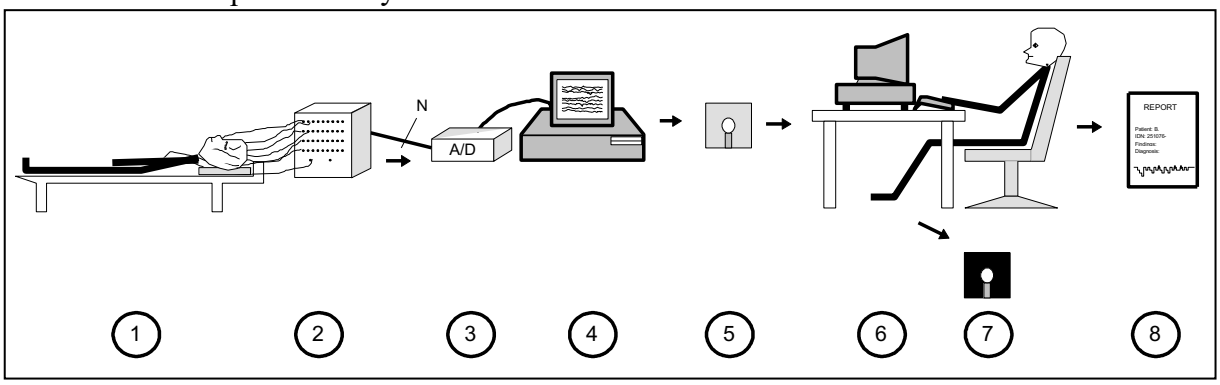

Figure: Typical Sleep Laboratory Recording Scenario

A patient (1) stays in the sleep laboratory overnight or longer. The signals, which are obtained either directly from the patient with electrodes (EEG, ECG) or with transducers, are amplified (2) and converted to digital form (3). A computer (4) collects the data. During recording the signals can be displayed on screen for quality control. The signals are stored, e.g. on an optical disk. Computer analysis and visual analysis is performed (6). A report (8) is generated which contains the results of the analysis. Specific results may be used for epidemiological studies and stored on floppy disk (7) for further processing by means of statistical analysis programs.

Data Requirements

– Graphic parameter data is the primary data type that must be communicated. Typical sources include:

Copyright © 2019: IHE International, Inc.

- ECG (up to 12 leads),
- EEG (many leads),
- EMG,
- EOG,
- etc.

- Some discrete parameter data may be communicated. Typical data includes heart rate, respiratory rate and oxygen saturation.

- Storage capacity in the Data Logger can vary from a few hours of data (~1 MByte) to multiple days worth of data (> 25 GByte).

- Device identification is required, i.e. this should address attributes such as Manufacturer, Device Model Number, Software Version Number, etc.

- Time stamps - the graphic parameter data will be timestamped, however synchronization is not required since there are not other data agents to synchronize with.

Communications Requirements

- Data acquisition is usually based on a connection-less basis - i.e. all data is sent continuously to the Data Logger. Any control of data rate or data transfer is done via configuration at the Data Agent (server) itself.

- Data volumes can be rather high, and are proportional to the number of graphic parameters and the sampling rate. However, data compression is rarely used between the Data Agent and the Data Logger.

UC.186 VITAL.2 - Data Logger - Multiple Devices

Overview

In this scenario there is now a one-to-many relationship between the device collecting the data (the manager device or data logger) and the devices producing the data (the agent device). That is, we now have multiple sources of data whereas before there was only one. This situation is typical of Clinical Information Systems and research situations.

Copyright © 2019: IHE International, Inc.

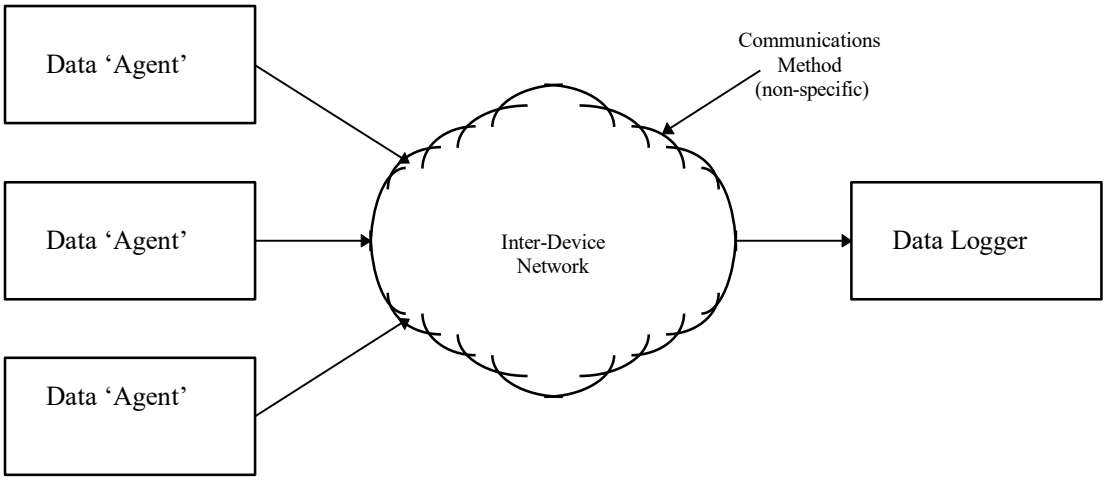

Figure: Data Logger - Multiple Devices

Examples

EXAMPLE 1: Infusion Device Concentrator - this application collects data from multiple infusion or syringe pumps. It stores infusion rates, alarms, status, and infusates. This device, in turn, can become a Data Agent to other Data Loggers.

EXAMPLE 2: Clinical Information System - this type of application is interested in acquiring only discrete parameters, sampled at intervals of ~ once per minute. The types of Data Agent devices include: patient monitors, ventilators, infusion devices, urimeters, scales (for patient weight), etc.

EXAMPLE 3: Anaesthesia Record Keeper - this application is similar to the Clinical Information System. The primary distinction is the rate of data acquisition which is usually higher.

EXAMPLE 4: Epilepsy intensive monitoring.

Copyright © 2019: IHE International, Inc.

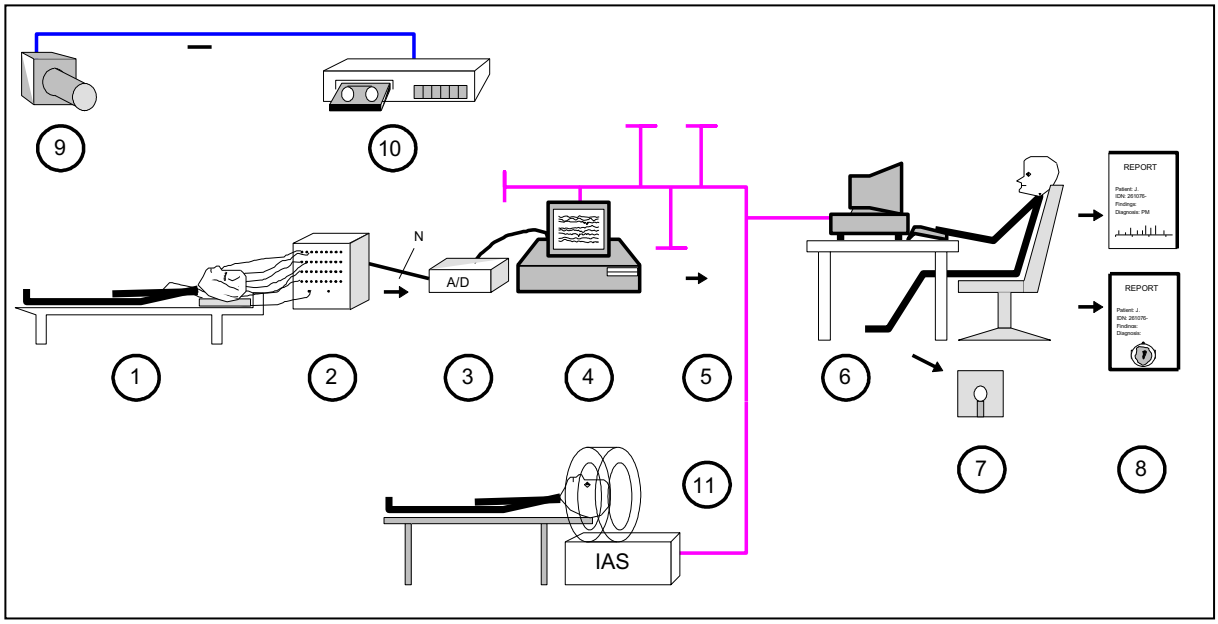

Figure: Epilepsy Intensive Monitoring Scenario Combined with a Medical Imaging System

Intensive monitoring is the most effective EEG monitoring method in the diagnostics of epilepsy. The patient stays in the laboratory for one to fourteen days and is under constant surveillance. EEG signals are recorded continuously applying a large number of EEG electrodes (1). The signals are amplified (2), converted to digital form (3), and stored by means of a computer (4), which simultaneously attempts to detect epileptic seizures. The computer is connected to a local area network (LAN) (5). One or two video cameras (9) record the movements of the patient on video tapes (10). At an analysis workstation, which is connected to the LAN, the EEG signals are analysed. The findings may be combined with magnetic resonance images (MRI) or computer tomogram images (CT) of the head of the patient obtained with a medical image acquisition system (11). The recording may be stored on permanent media such as CD-ROM disks (7). A report containing the results is generated (8).

Data Requirements Introduced

Device data types include:

- Patient Monitor Data - HR, VR, Pulse Rate, Pressure (S/D/M), %SpO2, Respiration, etc.;
- Ventilator Data - Respiration Rate, Breath Volume, Breathing Pressure;
- Infusors - Delivery Rate;
- Urimeters, Scales - Weight;
- Laboratory Information Systems - Blood gases, electrolytes, etc.

Copyright © 2019: IHE International, Inc.

Communication Requirements Introduced

- Multiple devices introduce a requirement for device addressability.
- Data acquisition is usually based on a request/reply basis, i.e. the Data Logger will request specific data at suitable self-determined intervals.
- 'Loose' device timestamp synchronization, in the order of 1 second, is required.

UC.187 VITAL.3 - Real-Time Data Display

Overview

In this scenario the manager device not only acquires and stores data but also displays the data, set. As a result there are 'real-time' issues that need to be addressed. This situation is typical of patient monitoring systems.

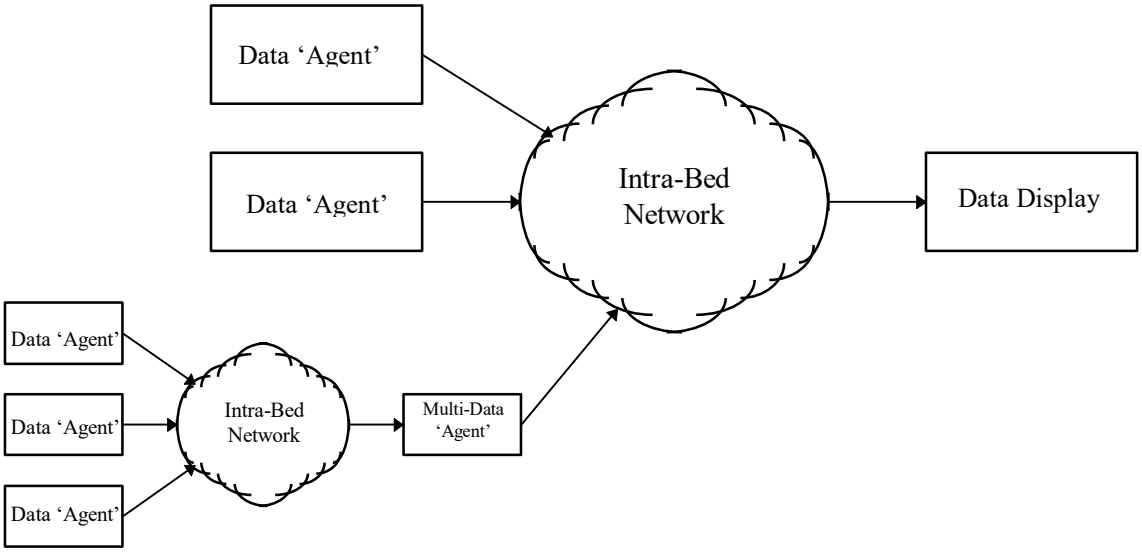

Figure: Real-Time Data Display

Examples

EXAMPLE 1: Patient Monitor - this application requires acquisition of data from a number of devices, including discrete and graphic parameter data. The data acquired from other medical devices is combined on the patient monitor display with locally acquired data. The types of data 'agent' devices include: gas monitors, ventilators, infusion devices, and other stand-alone medical devices.

EXAMPLE 2: Anaesthesia Record Keeper - this was already mentioned in the previous scenario - the distinction here is that some Anaesthesia Record Keeper systems also integrate real-time parameter and waveform data acquisition and display this data in real-time. These applications not only interface to devices like gas monitors, anaesthesia machines and ventilators but also patient monitors.

Copyright © 2019: IHE International, Inc.

EXAMPLE 3: Full Disclosure Systems - store both waveform and parameter data continuously over a specified time period (usually > 24 hours). In addition to acting as a data logger and data reviewer, these systems sometimes provide a real-time or quasi real-time display capability.

Data Requirements Introduced

No new data requirements.

Communication Requirements Introduced

– The data acquired from the different devices must be synchronized with each other, and with the locally acquired data. Synchronization may need to be as tight as a few milliseconds in the case of waveform data.

UC.188 VITAL.4 - Patient Alarm Monitoring

Overview

This scenario is similar to the previous one, except that it also incorporates the requirement for patient monitoring capabilities. Consequently, the primary requirement is the ability to report (and generate) patient related alarm information. This implies high reliability due to the fact that the clinical staff must act on this information.

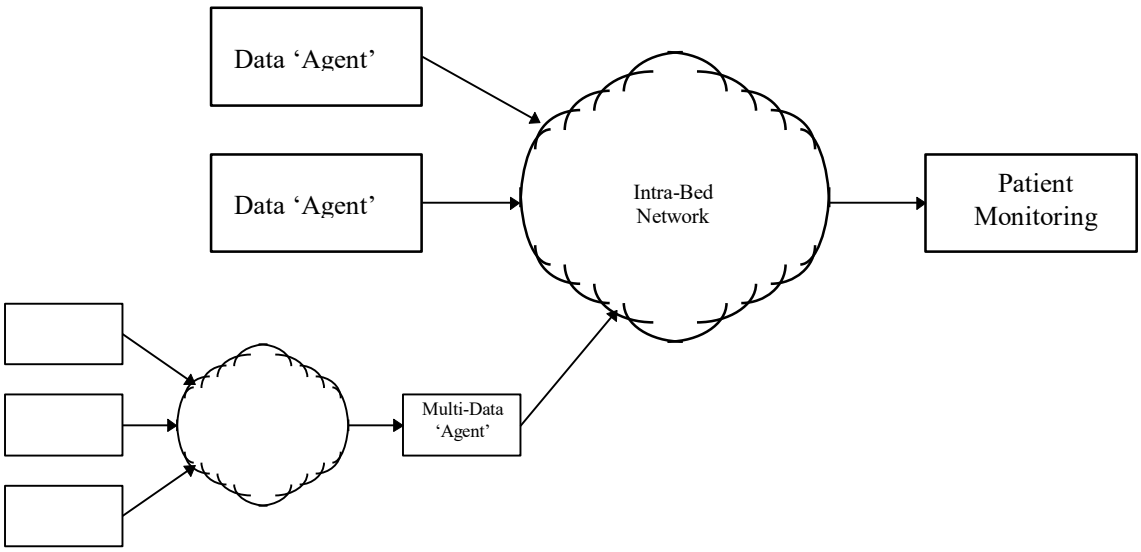

Figure: Patient Alarm Monitoring

Copyright © 2019: IHE International, Inc.

Example

EXAMPLE: Patient Monitor - this application requires acquisition of data from a number of devices, including discrete and graphic parameter data. The scenario also includes a requirement for alarm and alarm set-point information. The patient monitor not only displays and generates this information, but also allows the user to clear alarms on the source device. These functions require a guarantee of maximum latency, and reliability. The types of data 'agent' devices include: gas monitors, ventilators, infusion devices, and other stand-alone medical devices.

Data Requirements Introduced

- Alarm status, alarm grade
- Alarm description message
- Alarm generation (sound, colour, blinking, etc.)
- Some degree of harmonization of alarm classification, generation and display approaches may be required.

Communication Requirements Introduced

- The communication of alarm related information must be very reliable.
- The Display Device must be able to detect when a Data Agent is removed. Ideally it should be able to distinguish between an intentional disconnection and unintentional disconnection.
- A mechanism to send control data back to the Data Agent, and to acknowledge its receipt is required.

UC.189 VITAL.5 - Remote Control

Overview

This scenario adds the additional requirement that the manager can also accomplish remote control operations on a target medical device. As shown in the following figure, some devices may support remote control, and some may not.

Copyright © 2019: IHE International, Inc.

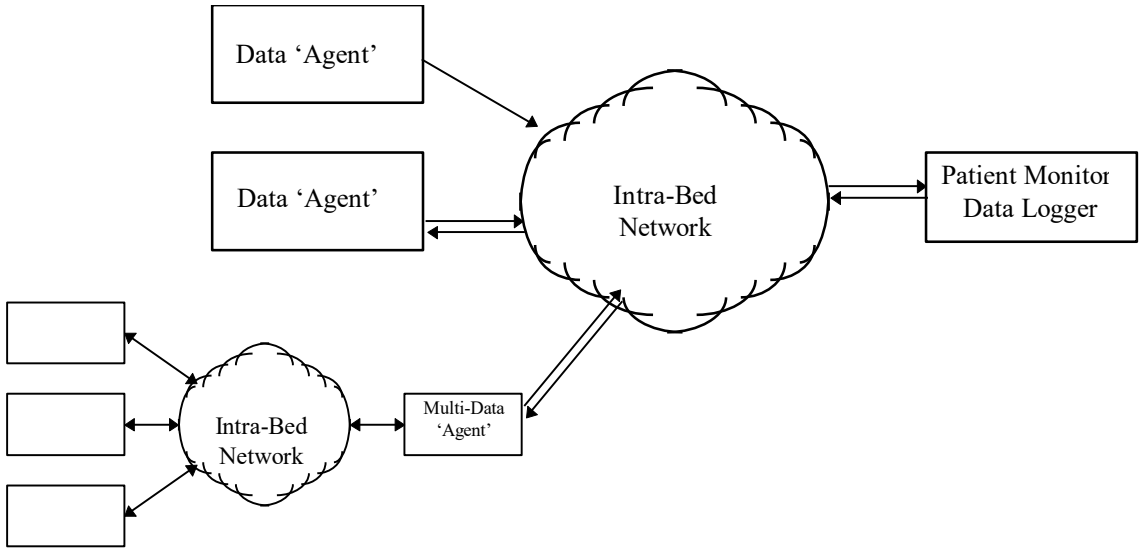

Figure: Remote Control Scenario

Examples

EXAMPLE 1: Patient Monitor - this application sometimes requires the ability to modify the set-points on the Data Agent devices. This may include alarm limits (high and low), lead selection and waveform filtering for example.

EXAMPLE 2: Infusion Device Controller - it may be desirable to modify the infusion rates on infusors or syringes remotely. Closed-loop infusion is an area of ongoing research which could be an example in this scenario.

Data Requirements Introduced

Remote control of:

- Alarm limits
- Alarm processing state
- Waveform gain, scale
- Waveform filtering
- Device set-points such as Infusion Rate, Ventilation Rate, etc.
- Remote control of alarm state (i.e. Silence/Reset/... of alarms)
- etc.

Copyright © 2019: IHE International, Inc.

Communication Requirements Introduced

– The communication of control related information must be highly reliable, especially if it affects the treatment of the patient.

UC.190 VITAL.6 - Patient Viewing Interoperability

Overview

Data acquisition and display from more than one patient is covered in this scenario. Multiple medical data 'agent' devices, each one covering one patient, communicate with either data display devices or data logging devices across a network. Data communication is primarily one-way.

Examples

EXAMPLE 1: Clinical Information Systems - collect data not directly at each bedside (as in a previous scenario), but from multiple patients by connecting to an Inter-Bed Network.

EXAMPLE 2: Full Disclosure Systems - tend to be centralized data logging systems for multiple patients. Collected data include discrete and graphic parameters, alarms and events.

EXAMPLE 3: Patient Data Viewing - this application requires acquisition of data from the bedside devices, including discrete and graphic parameter data and the facility of displaying it in a remote area, such as a clinician's office.

Copyright © 2019: IHE International, Inc.

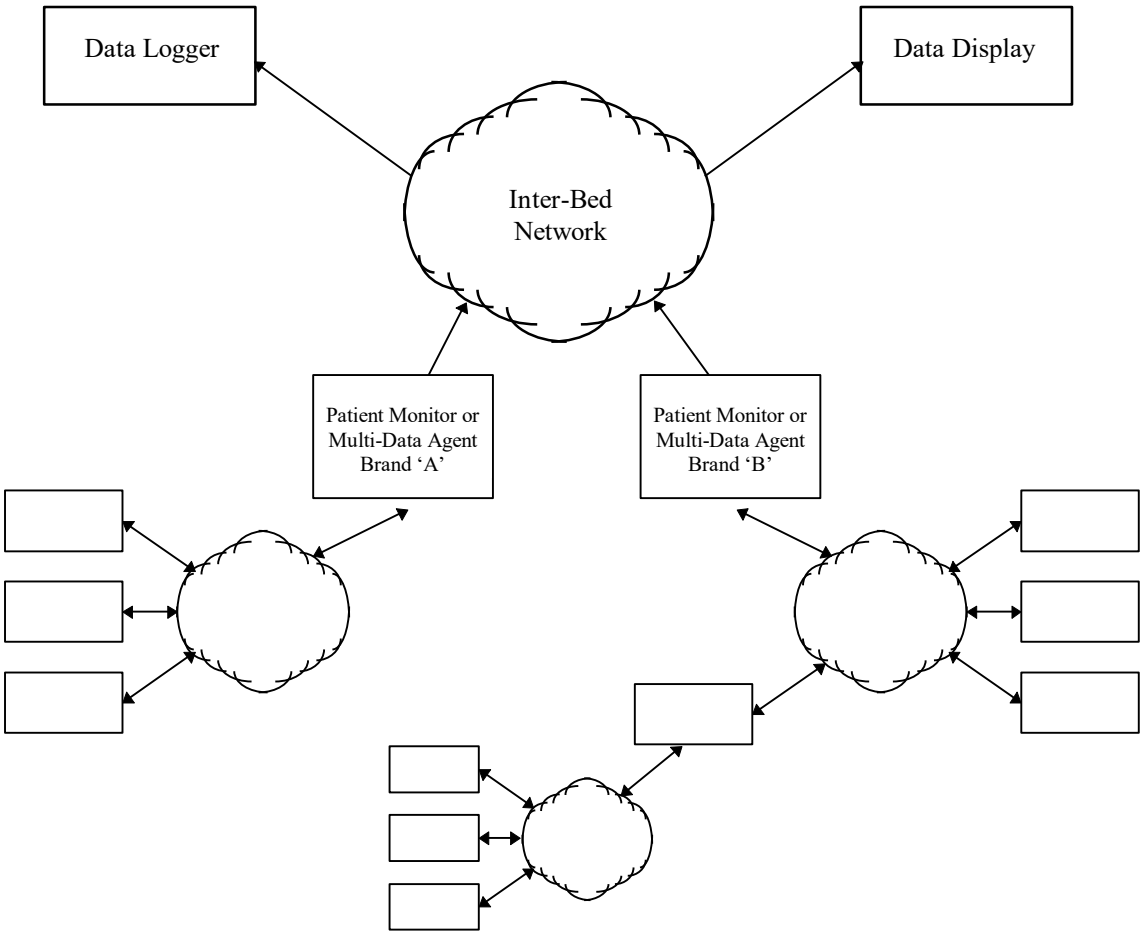

Figure: Patient Viewing Interoperability

EXAMPLE 4: Telemetry Systems - most current telemetry systems have one-way links, transmitting waveform and support information to central data collection receivers. It is conceivably necessary to provide for inter-operability between transmitters and receivers of different types originating from various companies.

Data Requirements Introduced

- Bed identification
- Care Unit identification
- Patient identification

Copyright © 2019: IHE International, Inc.

Communication Requirements Introduced

- Security of some nature must be incorporated into these systems. There must be some level of control such that a remote user (i.e. outside the care unit) cannot change the settings established by a nurse at the bedside. There may be legal issues relating to access to patient data.

- Harmonization of communication methods for RF telemetry systems would be required in order to support interoperable telemetry systems.

- Bandwidth management may become a big issue.

- The issue of managing multiple associations between a Data Agent and multiple Data Loggers or Data Displays needs attention.

UC.191 VITAL.7 - Patient Monitoring Interoperability

Overview

As an extension of the previous scenario multiple patients are not only viewed, but are 'monitored'. Therefore, reliable alarm generation and delivery, remote control for alarm reset and alarm settings, and mechanisms for central recording are available.

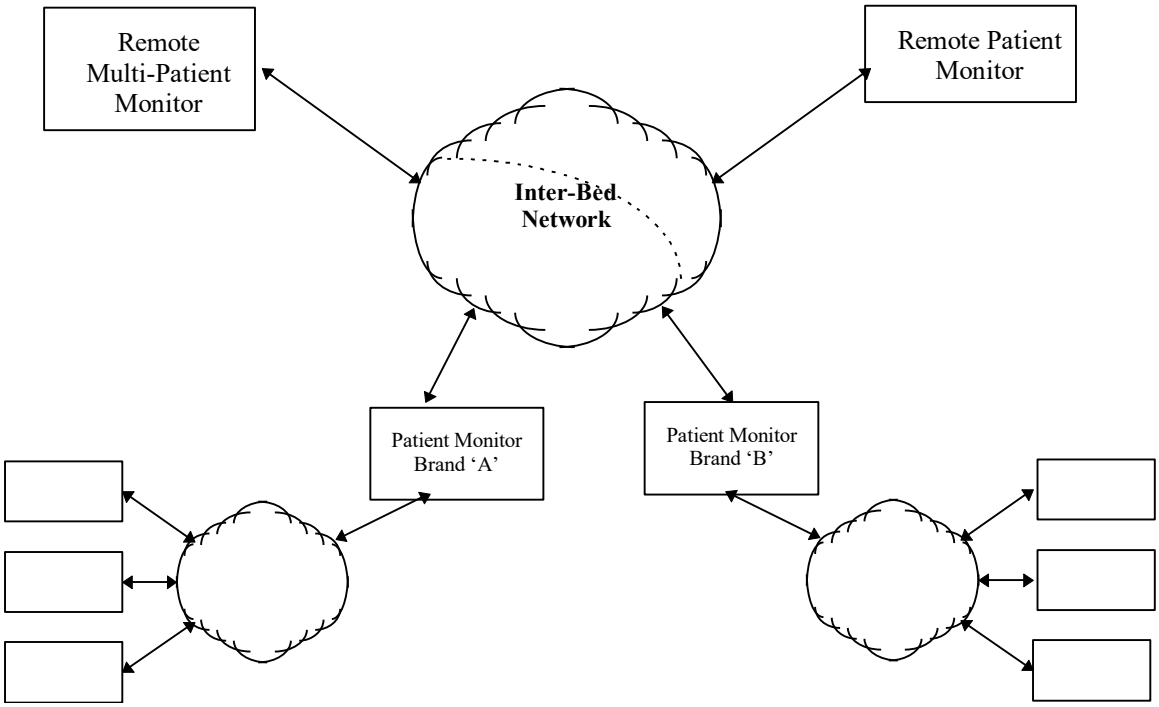

Figure: Patient Monitoring Interoperability

Copyright © 2019: IHE International, Inc.

Examples

EXAMPLE 1: Patient Monitoring Central Station - this application requires acquisition and display of real-time data, including waveforms, parameters and alarm data. The communications framework must guarantee a maximum latency so that data arrives promptly at the central devices. Alarms must be resettable from the remote location. Additional remote control and remote viewing capabilities are desirable.

EXAMPLE 2: Central Documentation Station - is a node on the Inter-Bed Network where strip-chart recordings may be sent from other devices on the network and locally requested. This application may be 'critical' in that alarm recordings and related documentation may also be sent to the Central Documentation Station.

Data Requirements Introduced

No new data requirements.

Communication Requirements Introduced

- Security must be incorporated into these systems. There must be some level of control such that a remote user (i.e. outside the care unit) cannot change the settings established at the bedside. There may also be legal issues relating to access to patient data.
- Harmonization of communication methods for access and use of strip-chart recorders may be required.
- Latency from Data Agent to Remote Monitoring Device must be controlled and specified. Generally, this should be less than one second to be acceptable.

UC.192 VITAL.8 - Patient Data Exchange (Off-line)

Overview

During many diagnostic procedures, the output of the data logger is not sent via the network, but is archived to a hard disk or other archive medium. This data is then sent to another site or user where it is restored from the transport medium and used.

Copyright © 2019: IHE International, Inc.

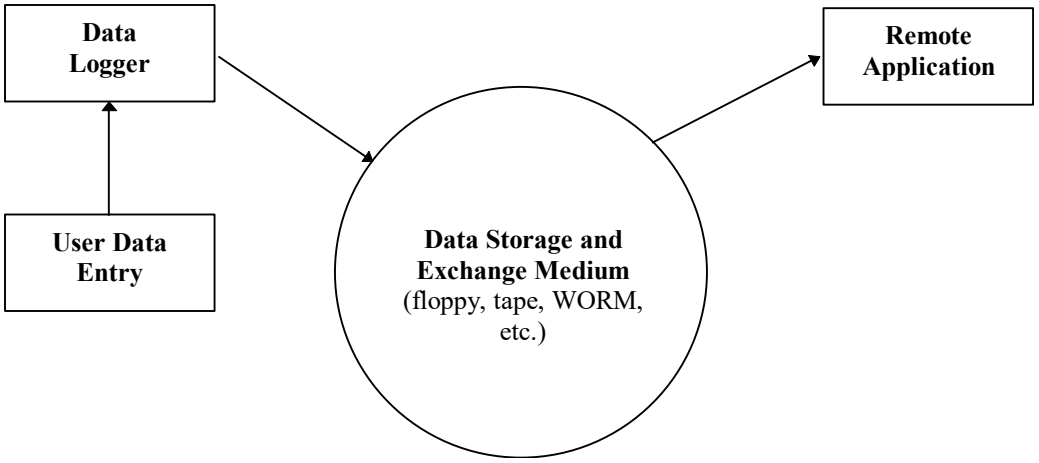

Figure: Patient Data Exchange (Off-line)

Examples

This class of scenario is typical of laboratory oriented biosignal data acquisition applications. The following is a restatement of the examples in the first scenario (**Error! Reference source not found.**.UC.185).

EXAMPLE 1: Diagnostic ECG System - 12 leads of ECG data is collected from the patient for 12 seconds, a diagnostic analysis is made and added to the record, in addition to patient identification information.

EXAMPLE 2: Digital EEG collection - typically from an analog to digital conversion system, often in a laboratory setting. Usually an hour or two of data is collected by the data logger.

EXAMPLE 3: Ambulatory ECG or EEG collection - this is what is normally referred to as Holter EEG or ECG. The recording usually contains 24 hours of data.

EXAMPLE 4: Sleep Lab scenario - multiple graphic parameters are collected via analog to digital conversion. The recording usually contains 12 hours of data.

EXAMPLE 5: Epilepsy Monitoring scenario - many channels of graphic parameter data (64 channels) are acquired via A/D conversion, for 1 to 14 days. Video information may also be acquired.

Data Requirements Introduced

New types of data include:

– Device Related Data;

– Patient Demographics Data;

Copyright © 2019: IHE International, Inc.

- Case Related Data;
- Trend Data;
- Event Data (such as Alarm snapshots, Evoked Potentials, ...).

Communication Requirements Introduced

This scenario adds the new dimension of a non-real-time exchange of data.

- The data is usually formatted in such a way that particular search algorithms and ways of using the data are optimally supported.
- The data is exchanged by a number of mechanisms:
- Storage medium exchange - floppy disks, hard disks, WORM, CD-ROM, etc.
- File transfer exchange - Transfer via FTP (File Transfer Protocol), transfer via E-mail, etc.
- There are no requirements for latency, except for reliable delivery of large files.

UC.193 VITAL.9 - Patient Data Exchange (On-line/Interactive)

Overview

This scenario addresses situations requiring remote on-line, interactive, viewing of archived data (i.e. subsets of the archived data may be transferred, rather than the full set). Archived data includes trend data, stored event data, notes, demographics, etc. This mechanism may also be extended to cover situations in which both a patient and his or her data are transferred from one system/location to another.

Copyright © 2019: IHE International, Inc.

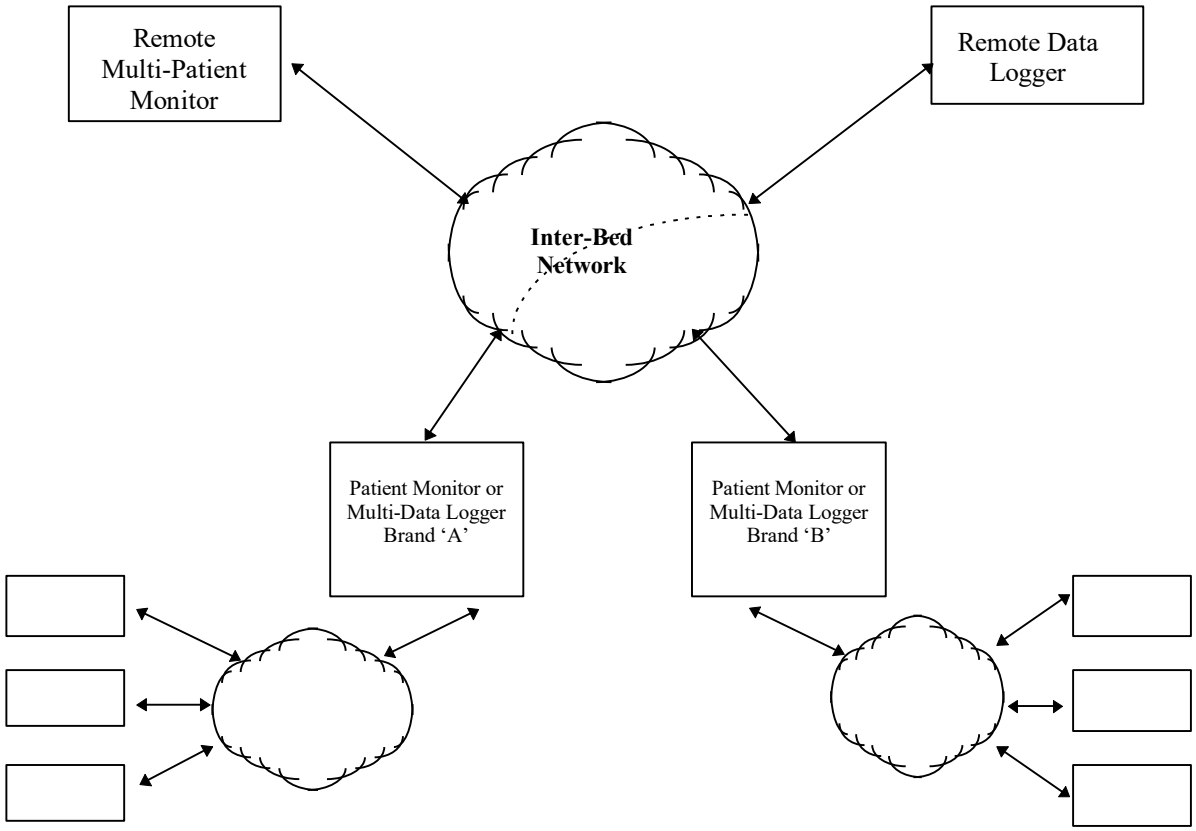

Figure: Patient Data Exchange (On-line/Interactive)

Examples

EXAMPLE 1: Patient Monitoring Patient Transfer - this application requires transfer of a set of patient data from one patient monitor to another (possibly the products of different manufacturers). This requires not only patient data exchange, as in the previous scenario, but also dynamic co-ordination of patient discharge from one node to admission on another.

EXAMPLE 2: Archive Data Review - this application requires transfer of specific subsets of the archive data set of a patient monitoring system, clinical information system, anaesthesia archive system, etc. This requires the manager system to discover the types of data available, the time span available, and then to specify which pieces of data to transfer.

Data Requirements Introduced

Requires support data:

– lists of archive data available (parameters, waveforms, events, notes, etc.);

– lists of archive data intervals available; etc.

Copyright © 2019: IHE International, Inc.

Communication Requirements Introduced

No new communication requirements.

Copyright © 2019: IHE International, Inc.

T ONC/AHIC Common Device Connectivity Use Cases

Introduction

In April and June of 2008, the American Health Information Community (AHIC) approved a recommendation to develop documents that address extensions/gaps from the use cases published between 2006 and 2008. One of the extensions/gaps prioritized for subsequent processing in the national health agenda activities in 2009 was Common Device Connectivity. AHIC specifically requested that the 2009 Common Device Connectivity Extension/Gap address the electronic exchange of information from high-acuity and inpatient diagnostic/therapeutic medical devices (e.g., physiological monitors, infusion pumps, ventilators, glucometers, blood pressure cuffs, and other devices) into Electronic Health Records (EHRs) and other systems.

This extension/gap document is being developed by the Office of the National Coordinator for Health Information Technology (ONC) to represent AHIC priorities and provide context for the national health agenda activities, beginning with the selection of harmonized standards by the Healthcare Information Technology Standards Panel (HITSP). Components that need to be considered during the standards identification and harmonization activities include standardized vocabulary, data elements, datasets, and technical standards that support the information needs and processes of the consulting clinicians and clinicians receiving patients from other care settings or organizations. This document is the Final AHIC Extension/Gap. Feedback received on the AHIC Extension/Gap has been considered and incorporated into this document where applicable. HITSP has the opportunity to reuse standards, where applicable, from those previously recognized by the Secretary of Health and Human Services, to specify and constrain how they are to be used to advance interoperability and to work with standards development organizations to see that gaps in standards are filled.

Scope

Common device connectivity is the means by which high-acuity and inpatient clinical device information such as settings, measurements, and monitoring values are communicated to and from EHR and other specialized clinical information systems. Examples of devices include hemodynamic monitors, ventilators, anesthesia monitors, and infusion pumps. Radiological devices are not considered in scope for this extension/gap.

Therefore, the requirements for 2009 Common Device Connectivity Extension/Gap can be summarized as:

- The ability to communicate high-acuity and inpatient multi and single parameter device information to and from an EHR and other specialized clinical information systems via direct network connections and wireless networking within an organization.

The identification, development, and harmonization of standards to support the interoperability associated with communication of device information to EHRs is progressing but will require additional work with standards and professional organizations, care delivery organizations, and organizations providing information technology services and products to the healthcare industry. As mentioned in Section 1.0, the needs expressed here have not yet been fully addressed by the

Copyright © 2019: IHE International, Inc.

national health agenda's standardization efforts. Examples of gaps in industry standards are outlined in the upcoming sections of this extension/gap document.

Functional Needs

This section describes a combination of end-user needs and system behaviors to support the exchange of information between medical devices and EHRs. Support for this exchange includes the development of interoperability standards for vocabularies, data elements, datasets, and other technical components that are implicit in these functional needs. Rather than an all-inclusive list of functional requirements, key capabilities are outlined below. The descriptions in this section are not intended to prescribe policy nor propose architectures required to implement capabilities.

UC.194 AHIC.1 - Configure and register a device to communicate with an EHR.

When a device is set up within an organization to communicate measurement information, the device is configured and registered within the organization's electronic health record to uniquely identify the device and enable connectivity between the device and system.

UC.195 AHIC.2 - Associate patient ID and device information within an EHR.

Patient registration, location, and identification information available within the EHR is uniquely associated with the patient's monitoring device using standardized mechanisms for admission, transfer, and discharge from beds, units, wards, and entities within the facility.

In the event patient identification information is associated with a device in error, the device can be disassociated with the current patient within the EHR and associated with the correct patient.

A patient may be placed on a monitoring device prior to the completion of patient registration or the availability of patient identification information within the EHR, especially in emergent or critical situations. The measurement information is available in the EHR upon initiation of the monitoring function or medical device initiation, and can be reconciled with patient registration or patient identification information within the EHR when available. Data collected prior to patient registration should be buffered and retained for a reasonable period of time sufficient to complete the registration process.

Organizational policies and procedures may require medical device measurement values within a patient's record to be validated by a licensed clinician prior to being stored within a patient's record. This function may prevent the charting of erroneous values within a patient's permanent medical record.

UC.196 AHIC.3 - Communicate measurement information to the EHR

Measurement and device information generated by the medical device is communicated to the EHR. Measurement information such as device settings, parameters, values, and units may be utilized by the EHR and/or clinical decision support (CDS) systems to support patient management.

The devices should communicate state, error conditions, and user selections to support the analysis of adverse events.

UC.197 AHIC.4 - Communicate device meta-data with each measurement to the EHR.

Copyright © 2019: IHE International, Inc.

When a patient device is replaced by another device of the same type, measurement information may seamlessly populate the EHR. The devices may be from different manufacturers, but communicate the same information to the EHR. The EHR recognizes the measurement parameters and is able to represent the measurement values consistently within the EHR. Device information, settings, and metadata specific to each device is associated with each measurement value and is accessible within the EHR. This is accomplished via a standards-based first communication link interface between the point-of-care device and the EHR, device intermediary, or device gateway."

A patient may be placed on multiple monitoring and patient care devices that need to be associated with the patient within the EHR. When multiple devices are capturing the same measurement or monitoring parameter, the information available within the EHR enables clinicians to distinguish between the measurements and determine the measurements that are captured from each device.

Device data should be uniquely associated with the device, the patient, and the date and time the data was acquired, sent, and received.

UC.198 AHIC.5 - Communicate measurement intervals, etc. within the EHR.

When a patient is placed on a medical device, the clinician's order details may specify measurement intervals for patient information to be communicated to the EHR.

Depending upon patient acuity and monitoring needs, measurement intervals may need to be modified during the course of patient care. A clinician may modify the measurement parameters and intervals via the EHR or by modifying the device directly. Measurement interval information is communicated from the device to the EHR so the clinician may access this information.

Inbound device settings and controls from the EHR may be subject to clinical oversight, validation and verification at the point of care prior to execution on the instrument itself.

Measurement intervals are reconciled against the system time available from the EHR to ensure consistent and accurate identification of time intervals and absolute time.

The communication of multiple interval types should be supported (e.g. episodic, regular, quasi-continuous, sampled waveform, continuous waveform).

UC.199 AHIC.6 - Query the device or device intermediary for additional information.

A clinician may request certain intervals for viewing device measurements or information within the EHR. If a patient event occurs that requires further investigation, the clinician may utilize the EHR to query for additional retrospective device information or measurement details that were not initially communicated to the EHR based upon the data intervals set for the patient.

UC.200 AHIC.7 – Gracefully recover from a lapse in EHR connectivity.

If a break in network connectivity occurs, or other factors prevent device communication to the EHR, device and measurement information is communicated to the EHR when connectivity is restored. Upon establishing or re-establishing this connectivity, there is no loss of measurement information in the EHR. In addition, details associated with measurement or device settings are communicated with the appropriate timestamp and patient parameters (e.g., identification, device settings) present at the time of information capture at the device.

Copyright © 2019: IHE International, Inc.

A notification may be sent to the EHR notifying of the event in which data transmission or communications are lost between the EHR and medical device. This notification consists of a standard health and status message that confirms device connectivity and general operation.

UC.201 AHIC.8 - Communicate standardized alarm types to the EHR.

If a medical device generates an alarm, the alarm information and details are communicated to the EHR in time to support clinician life support efforts and critical care activities. Both text-based and audible alarm information should be communicated. For example, when a clinician or patient modifies device settings such as patient-controlled analgesics that are out of range and generates an alarm, the alarm and associated device details are communicated to the EHR.

UC.202 AHIC.9 - Set limits and safeguards for device settings from the EHR to a device.

Evidence-based guidelines or clinician preferences for device parameters or alarms may be communicated from the EHR or other systems to the device. For example, this would enable an infusion pump to be interrupted or paused based upon EHR information or decision-support information. Interrupts and pauses are not intended to be or imply closed loop control.

UC.203 AHIC.10 - Wirelessly communicate PoC device information from the device to a device intermediary or EHR.

Wireless communication of high-acuity and inpatient medical device information may require specifications for wireless networking that supports the critical nature of this information and can co-exist with other medical devices and wireless applications.

Information Exchange

The information exchange requirements for the effective selection and communication of common device information may comprise:

- The ability to communicate and associate device and patient information to an electronic health record (EHR);
- The ability to communicate device setting and measurement information to the EHR for effective patient monitoring and management;
- The ability to communicate and manage measurement intervals and device setting information within the EHR;
- The ability to query for additional device information captured by the device that may not have been communicated to the EHR;
- The ability to communicate measurement information to the EHR when there is a lapse in EHR connectivity;
- The ability to communicate standardized alarm types and alarm violation types to the EHR;
- The ability to set and communicate limits and safeguards for device settings from the EHR to a device; and
- The ability to wirelessly communicate point of care device information from the device to a device intermediary or EHR.

Copyright © 2019: IHE International, Inc.

Examples of information exchange capabilities described above and in Section 3.0 may include: Registration of a Device, Patient, and Data Recipient; Data Retrieval; Data Delivery; and Subject Data Matching. Descriptions of each of these are in the previous 2006 – 2008 AHIC Use Cases.

The functional capabilities may be provided fully or partially provided by a variety of organizations including: health information exchange organizations, integrated care delivery networks, provider organizations, health record banks, specialty networks, and others. While not described in this section, device intermediary, Health Information Exchange (HIE), Point-to-Point exchanges, or specialty network exchanges may assist in the completion of the processes described in this extension/gap. Examples of these exchanges can be found in the previous 2006 – 2008 AHIC Use Cases.

Dataset Considerations

The following non-exhaustive information categories and limited examples illustrate some of the information needs from this extension/gap document. Examples of common device information are included in Appendix B.

To date, there is no harmonized dataset associated with the communication of common device information to EHRs. Device information communicated to EHRs could include raw data, intervals of raw data, alert information, device setting information, device identification information, device summary information, and device intermediary or interface information.

A. **Device Identification/Registration Data** – Information that assists in the communication and registration of a device within an EHR. This may include: unique device identification, device type, brand, serial number, manufacturer, and device intermediary information.
B. **Patient Identification and Device Association Data** – Information that assists in the communication and coordination of patient and device identifying information within an EHR. This may include patient identification information, patient location, device identification information, and clinician information.
C. **Device Types and Modules** – Information that assists in the identification of clinical devices, components, and associated management interfaces. Standards harmonization is needed to identify device types, particularly where multiple device types may be capturing the same measurement value or parameter. Device types may include: anesthesia monitors, hemodynamic monitors, therapeutic devices (e.g. infusion pumps, dialysis machines, heart lung bypass machines), ventilators, and vital signs monitors.
D. **Measurement/Monitoring Parameters** – Information that assists in the identification of measurement, monitoring, or setting parameters that may be generated by a clinical device. Standards harmonization is needed to identify measurement parameters that may enable use of device information in EHRs and clinical decision support applications. Examples of parameters include blood glucose, blood pressure, heart rate, and temperature.
E. **Measurement Details** – Information that may accompany a device parameter or measurement that includes patient identification, clinician identification, device setting, user-interaction, measurement interval, units, and error/calibration details.

Copyright © 2019: IHE International, Inc.

F. **Alarm and Alert Types**–Details indicating alarms as well as alert types (alert levels) that may be generated by a device when a device setting or measurement value is out of range or identifies a change in trend.

Analysis and Examples

The following non-exhaustive information categories and limited examples are provided as background information for future standards efforts to provide direction on information needs for common device connectivity:

Device Identification/Registration Data– Information that assists in the communication and registration of a device within an EHR	
A.1.	Device Identifier (Device Type, Brand, Serial Number, Date of Manufacture, Location of Assembly)
A.2.	Other Identifying Information – Device Manufacturer or Intermediary
Patient Identification and Device Association Data – Information that assists in the communication and coordination of patient and device identifying information within an EHR.	
B.1.	Patient Identification Information
B.2.	Patient Location
B.3.	Clinician Identification
Device Types and Modules – Information that assists in the identification of clinical devices, components, and associated interfaces. Standards harmonization is needed to identify device types, particularly where multiple device types may be capturing the same measurement value or parameter.	
C.1.	Airway
C.2.	Anesthesia Machine
C.3.	Hemodynamic Monitor
C.4.	Intracardiac Monitor
C.5.	Medication Infusion Device
C.6.	Modules for Anesthesia Machine (Various)
C.7.	Pulmonary Artery (PA) Catheter
C.8.	Patient Controlled Analgesia (PCA) Pump
C.9.	Suction
C.10.	Ventilator
C.11.	Vital Signs Monitors (Various)
Measurement/Monitoring Parameters – Information that assists in the identification of measurement, monitoring, or settings parameters that may be generated by a clinical device. Standards harmonization is needed to identify measurement parameters that may enable use of device information in EHRs and clinical decision support applications. Examples are provided below.	
D.1.	Vital Signs • Blood Gas • Blood Pressure – Diastolic, Systolic, Mean, Wedge

Copyright © 2019: IHE International, Inc.

	• Unspecified
	• Non-invasive
	• Invasive
	  ○ Arterial
	  ○ Central Venous
	  ○ Left Atrial
	  ○ Pulmonary Arterial
	  ○ Pulmonary Capillary Systemic
	  ○ Right Atrial
	  ○ Umbilical Venous
	• Pulse Oximetry Peripheral Heart Rate o Respiratory Rate
	• Temperature (Temp)
	• Airway Temp
	• Arterial Temp
	• Core (Body) Temp
	• Esophageal Temp
	• Injectate Temp
	• Nasopharyngial Temp
	• Rectal Temp
	• Skin Temp
	• Unspecified Temp
	• Venous Temp

D.2.	Pulmonary Artery (PA) Catheter • Cardiac Output • Pulmonary Artery Systolic Pressure • Pulmonary Artery Diastolic Pressure • Mean Arterial Pressure (MAP)
D.3.	Hemodynamic Monitoring • Arterial Oxygen Content (CaO2) • Arterial Oxygen Pressure (PaO2) • Arterial Oxygen Saturation (SaO2) • Arterial Oxygen Saturation (SpO2) • Arterial-Venous Oxygen Difference (a-vO2) • Body Surface Area (BSA) • Cardiac Index (CI) • Cardiac Output (C) • Cardiac Output Average • Continuous Cardiac Output • Coronary Perfusion Pressure (CPP) • Ejection Fraction (EF) • End Diastolic Volume • End Diastolic Volume Index • End Systolic Volume • End Systolic Volume Index • End Tidal CO2 • Heart Rate • Mean Arterial Pressure (MAP) • Mixed Venous Oxygen Pressure (PvO2) • Mixed Venous Oxygen Saturation (SvO2)

Copyright © 2019: IHE International, Inc.

	• Oxygen Consumption (VO2) • Partial Carbon Dioxide Venous (PvCO2) • Partial Pressure Carbon Dioxide (pCO2) • Partial Pressure Oxygen (pO2) • Pulmonary Capillary Wedge Pressure (PCWP) • Regional Oxygen Saturation o Stroke Volume • Stroke Volume Indexed • Systemic Vascular Resistance • Systemic Vascular Resistance Indexed • Total Pulmonary Resistance • Venous Oxygen Content (CvO2)
D.4.	Ventilator Modes • Assist-Control Ventilation (A/C) • Constant Positive Airway Pressure (CPAP) • Control Ventilation (CV) • High Frequency Ventilation (HFV) • Independent Lung Ventilation (ILV) • Inverse Ratio Ventilation (IRV) o Positive End Expiratory Pressure (PEEP) • Pressure Support Ventilation (PSV) • Synchronous Intermittent Mandatory Ventilation (SIMV) Ventilator Settings and Parameters • Flow Rate • Flow Trigger • Fractional Inspired Oxygen (Fi02) • Inspiratory to Expiratory Time Ration (I:E Ratio) • Measured Tidal Volume • Peak Pressure • Positive End Expiratory Pressure (PEEP) Pressure • Preset Tidal Volume • Pressure Support • Sensitivity/Trigger • Sigh
Measurement Details – Information that may accompany a device parameter or measurement that includes patient identification, clinician identification, device setting, user-interaction, measurement interval, units, and error/calibration details.	
E.1.	Device Identification Information
E.2.	Patient Identification Data
E.3.	Device Type
E.4.	Device Setting Information (May vary across device types)
E.5.	Device Setting Changes or User Interaction (“Keystroke”) Information
E.6.	Date/Time of Measurement
E.7.	Measurement Interval
E.8.	Measurement Scale/Units
E.9.	Device Calibration/Programming Data

Copyright © 2019: IHE International, Inc.

E.10.	Error Details: • Device Malfunction • Device not Functioning within Specifications • Operator Error During Measurement • o Measurement Cancelled (Stopped measurement process or marked measurement as invalid)
Alarm and Alert Types – Details indicating alarms as well as alert types (alert levels) that may be generated by a device when a device setting or measurement value is out of range or identifies a change in trend.	
F.1.	Ventilator Alarms (safety, warning, caution) • Apnea Interval • High Oxygen • High Peak Inspiratory Pressure (PIP) • High Pressure Limit o High Respiratory Rate • Low CPAP • Low Exhaled Minimum Volume • Low Exhaled Tidal Volume • Low Oxygen • Low Peak Inspiratory Pressure (PIP) • Low PEEP • Low Pressure Limit • Maximum Airway Pressure (Paw) Exceeded • Minimum Airway Pressure (Paw) Exceeded • Minute Volume High • Minute Volume Low • Minimum Minute Ventilation
F.2.	Other Alert Types: • Hemodynamic Monitoring Alarms • Electorcardiographic Alarms (e.g. ST segment changes) • Infusion Pump Alarms • Mechanical Ventilation Alarms Other Sample Alarm Types for Device Function: • Air in Line o Bag Empty • Device Malfunction • Door Open • Low Battery • Low Flow • Occlusion • Programming Error • Pump on Hold • Set Loading Error

Copyright © 2019: IHE International, Inc.

U "Special" Patient Monitoring Use Cases

There are a number of challenging Use Cases that most acute care patient monitoring vendors need to address in their system designs. These are summarized in this section in order to provide a more complete picture of the overall system requirements for device to device interoperability.

UC.204 PM.1 - Synchronized Cardioversion

Narrative

When applying a defibrillator pulse to a patient it is very important that the shock is synchronized with the patient's ECG, assuming the patient still has an ECG. If the shock is applied at the wrong time, i.e. during the T-wave, then serious adverse events can occur such as inducing ventricular fibrillation.

Most patient monitors supply a trigger output that provides a signal which the defibrillator can use to determine when a QRS has been detected by the patient monitor. The defibrillator can then use this to apply the shock at an appropriate time in the heart cycle. The signal from the patient monitor needs to be extremely close to real-time, typically within 20 milliseconds of the QRS occurrence.

Commentary

The synchronization signal is usually derived using a special algorithm path in the patient monitor which generates an analog signal from the patient monitor to the defibrillator. Over time, due to the workflow issues related to connecting the patient monitor to the defibrillator, and increasing sophistication of defibrillators, most can acquire their own ECG signals and do not require a connection to a patient monitor.

Because of the difficult real-time requirements and lack of clinical need, this Use Case should not be considered.

UC.205 PM.2 - Intra-Aortic Balloon Pump Synchronization

Narrative

The Intra-Aortic Balloon Pump (IABP) is used to supplement the pumping action of the heart when the patient's heart functionality is compromised. The initiation of a balloon pump cycle must be synchronized with the pumping action of the patient's heart in order to provide effective assistance. If the IABP inflates at the wrong time, then serious adverse events can occur including interfering with the pumping action of the heart and reducing cardiac output instead of increasing cardiac output.

Most patient monitors supply a trigger output that provides a signal which the IABP can use to determine when a QRS has been detected by the patient monitor. The IABP can then use this to inflate the balloon at an appropriate time in the heart cycle. The signal from the patient monitor needs to be extremely close to real-time, typically within 20 milliseconds of the QRS occurrence.

Copyright © 2019: IHE International, Inc.

Commentary

The synchronization signal is usually derived using a special algorithm path in the patient monitor which generates an analog signal from the patient monitor to the IABP. Over time, due to the workflow issues related to connecting the patient monitor to the IABP, and increasing sophistication of the IABPs, most can acquire their own ECG signals and do not require a connection to a patient monitor.

Because of the difficult real-time requirements and lack of clinical need, this Use Case should not be considered.

UC.206 PM.3 - Catheter Insertion Procedure

Narrative

When a surgeon threads a cardiac catheter into a patient they look at the patient monitor's pressure waveform to determine where the tip of the catheter is located. While in the arterial system they will get a certain waveform with certain systoloc and diastolic pressures. As the catheter enters the heart the pressure changes along with the waveform especially as the catheter moves from the left ventricle into the left aorta, etc. etc. At some point the catheter reaches as far as it can go which is the tip of the pulmonary artery. It is critical that the catheter is not pushed too far otherwise damage can occur to the patient's vasculature.

In order to avoid this situation the surgeon must be skilled, but the waveform on the display that he/she is looking at must meet certain latency requirements. In my experience a latency of <200 msecs is required in order to assure adequate hand-eye coordination.

UC.207 PM.4 - The User "Cockpit"

Narrative

During the November IDEA Series discussion at West Health Institute Dr. Balzer of Vanderbilt University pointed to a picture of a patient in an OR almost hidden by all the equipment surrounding him. Dr. Balzer had the vision that one-day data from this equipment could be viewed from a single location and that this equipment could also be managed from that same location. In fact, the degree of interoperability would be seamless enough to dispense with all the separate screen displays on the individual devices.

(Part of his vision also included Use Cases PM.1 and PM.2).

Copyright © 2019: IHE International, Inc.